Circuit Diagram

Finisher, Sorter, DeliveryTray
Saddle Finisher-Q2

Canon

Nov 12 2003

IMPORTANT

This documentation is published by Canon Inc., Japan, to serve as a source of reference for work in the field.

Specifications and other information contained herein may vary slightly from actual machine values or those found in advertising and other printed matter.

Any questions regarding the information contained herein should be directed to the Copier Service Department of the Sales Company.

This documentation is intended for all sales areas, and may contain information not applicable to certain areas.

Reproduction without permission not allowed.

Use of this manual should be strictly supervised to avoid disclosure of confidential information.

COPYRIGHT 2001 CANON INC.

Printed in Japan

Caution

Use of this manual should be strictly supervised to avoid disclosure of confidential information.

Contents

1 Finisher Controller PCB 1
Finisher Controller PCB（A501） 1
Finisher Controller PCB（A502） 2
Finisher Controller PCB（A503） 3
Finisher Controller PCB（A504） 4
Finisher Controller PCB（A505） 5
Finisher Controller PCB（A506） 6
Finisher Controller PCB（A507） 7
Finisher Controller PCB（A508） 8
Finisher Controller PCB（A509） 9
Finisher Controller PCB（A510） 10
Finisher Controller PCB（A511） 11
Finisher Controller PCB（A512） 12
Finisher Controller PCB（A513） 13
Finisher Controller PCB（A514） 14
2 Stapler PCB 1 15
Stapler PCB1 15
3 Stapler PCB 2 17
Stapler PCB2 17
4 Tray2 Shift Area Sensor PCB 19
Tray1/Tray2 Shift Area Sensor PCB 19
5 Tray1/Tray2 Driver PCB 21
Tray1/Tray2 Driver PCB 21
6 Saddle Stitcher Controller PCB 23
Saddle Stitcher Controller PCB（A501） 23
Saddle Stitcher Controller PCB（A502） 24
Saddle Stitcher Controller PCB（A503） 25
Saddle Stitcher Controller PCB（A504） 26
Saddle Stitcher Controller PCB（A505） 27
Saddle Stitcher Controller PCB（A506） 28
Saddle Stitcher Controller PCB（A507） 29
Saddle Stitcher Controller PCB（A508） 30
Saddle Stitcher Controller PCB（A509） 31
7 Saddle Driver PCB 33
Saddle Driver PCB 33
8 Paper Sensor PCB 35
Paper Sensor PCB 35

1 Finisher Controller PCB

Finisher Controller PCB（A501）

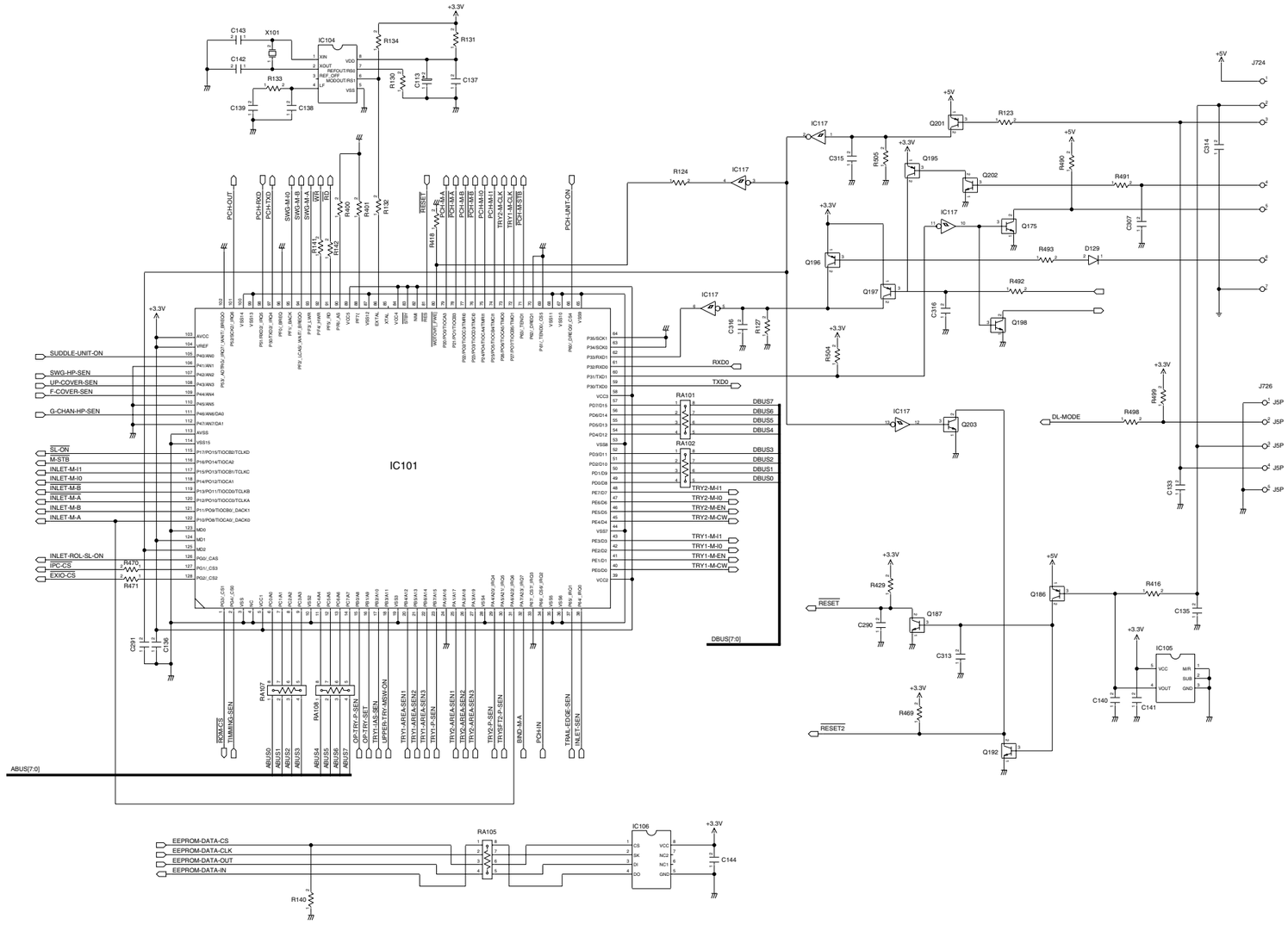

F-1-1

Finisher Controller PCB（A502）

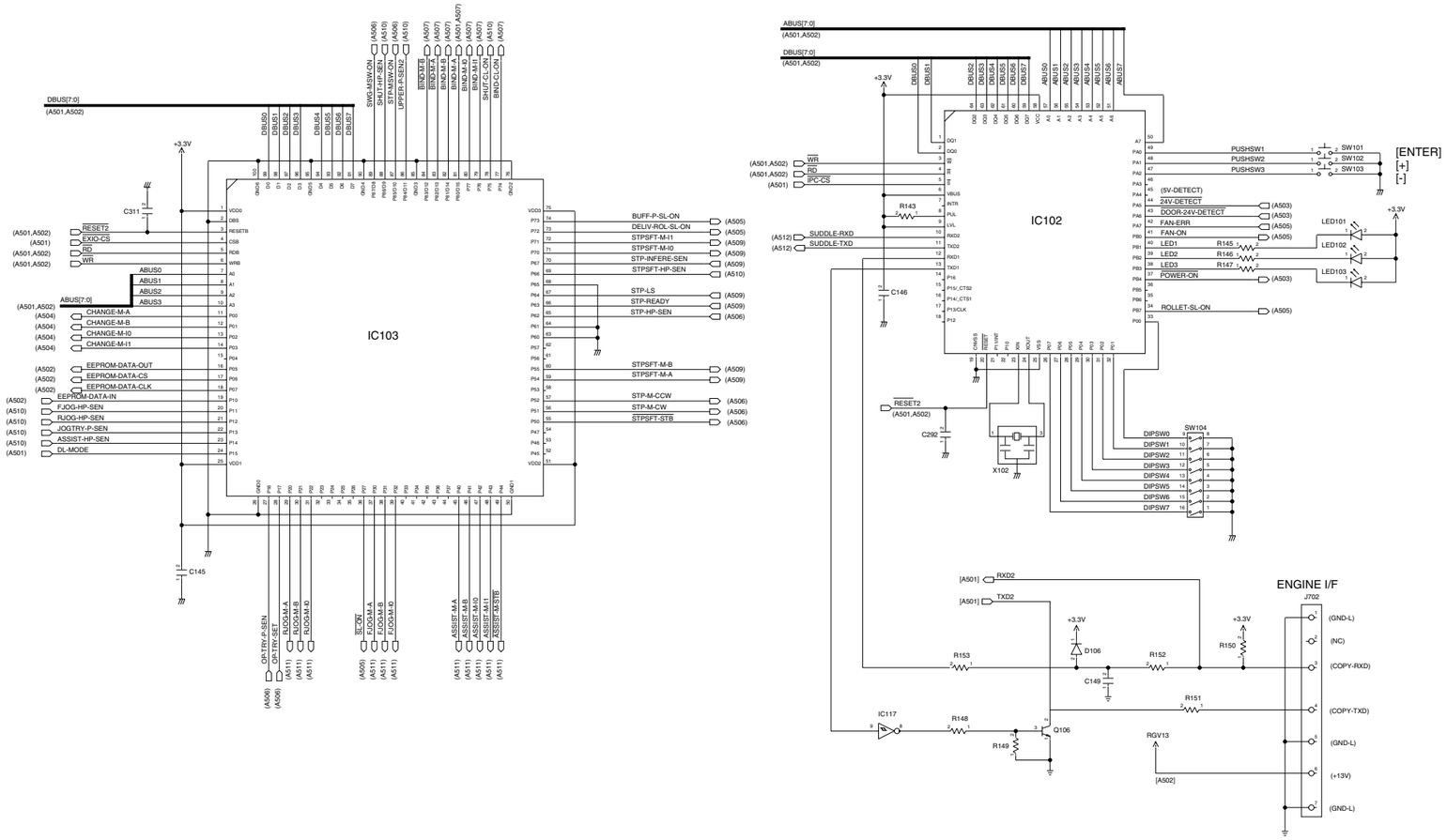

F-1-2

Finisher Controller PCB（A503）

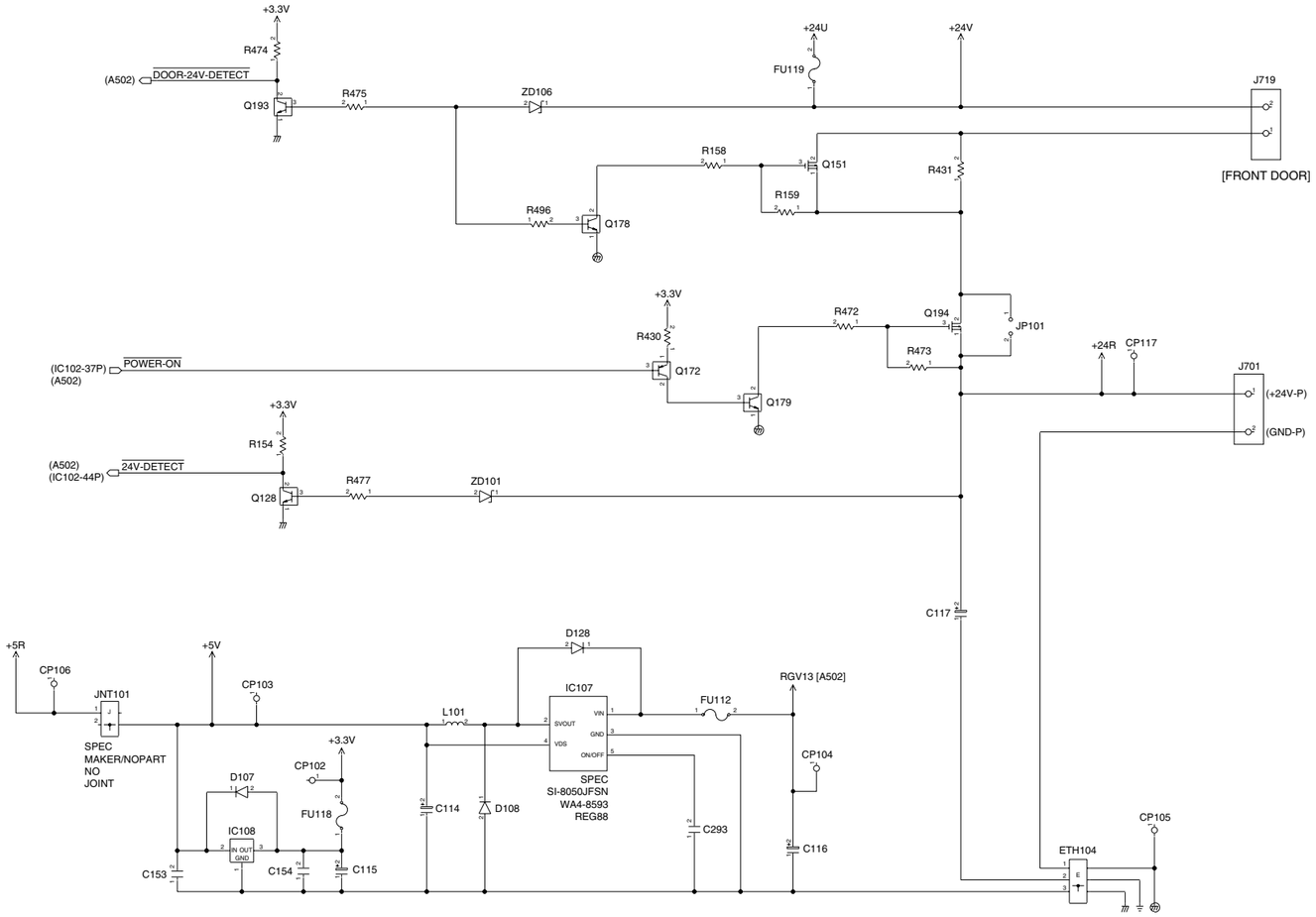

F-1-3

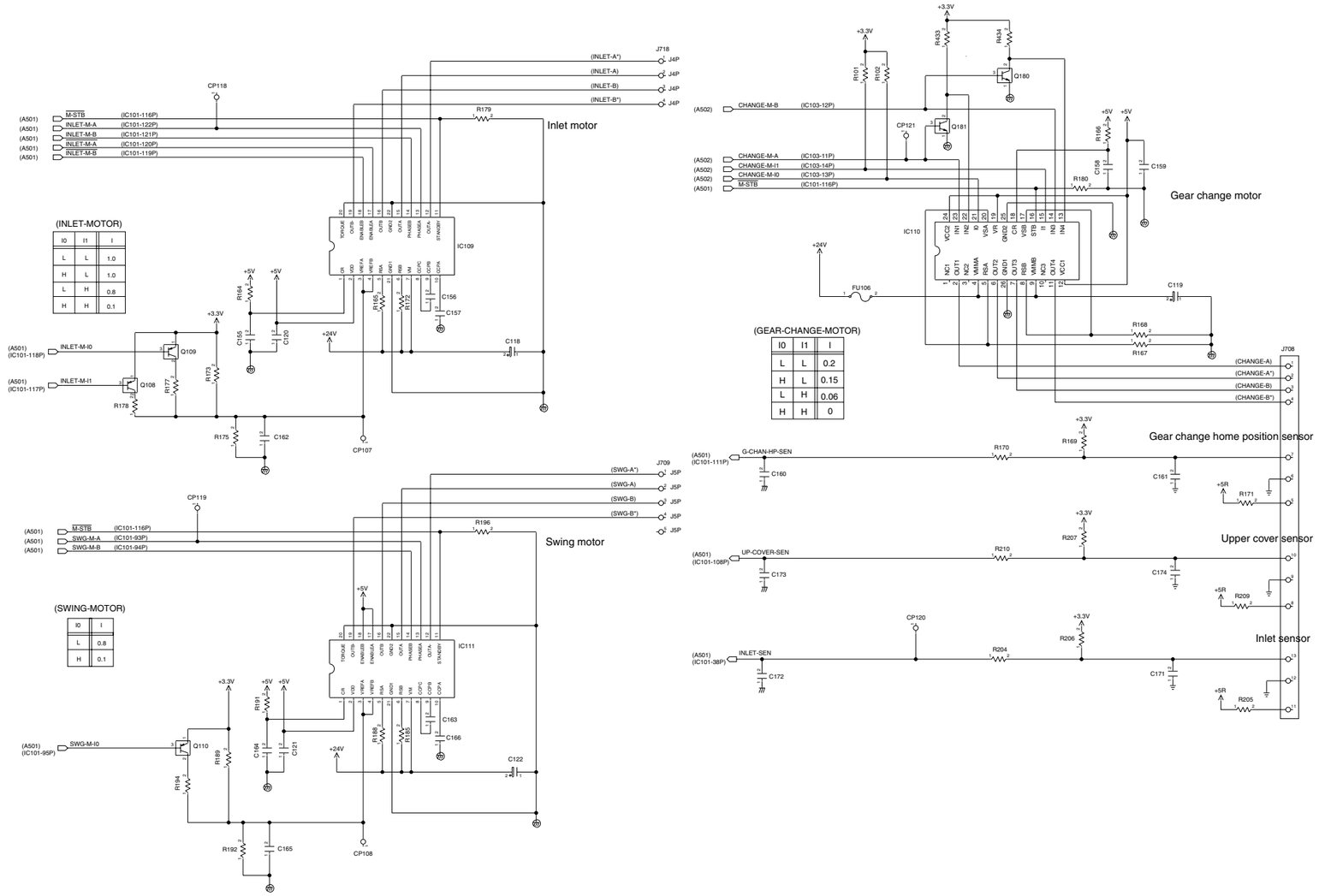
Inlet motor
Gear change motor
Gear change home position sensor
Upper cover sensor
Inlet sensor
Swing motor
(INLET-MOTOR)
(GEAR-CHANGE-MOTOR)
(SWING-MOTOR)
IC109
IC110
IC111
J718
J708
J709
CP118
CP119
CP120
CP121
CP107
CP108
(INLET-A*)
(INLET-A)
(INLET-B)
(INLET-B*)
(CHANGE-A)
(CHANGE-A*)
(CHANGE-B)
(CHANGE-B*)
(SWG-A*)
(SWG-A)
(SWG-B)
(SWG-B*)
M-STB
INLET-M-A
INLET-M-B
INLET-M-I0
INLET-M-I1
CHANGE-M-B
CHANGE-M-A
CHANGE-M-I1
CHANGE-M-I0
G-CHAN-HP-SEN
UP-COVER-SEN
INLET-SEN
SWG-M-A
SWG-M-B
SWG-M-I0
+3.3V
+5V
+24V
+5R

F-1-4

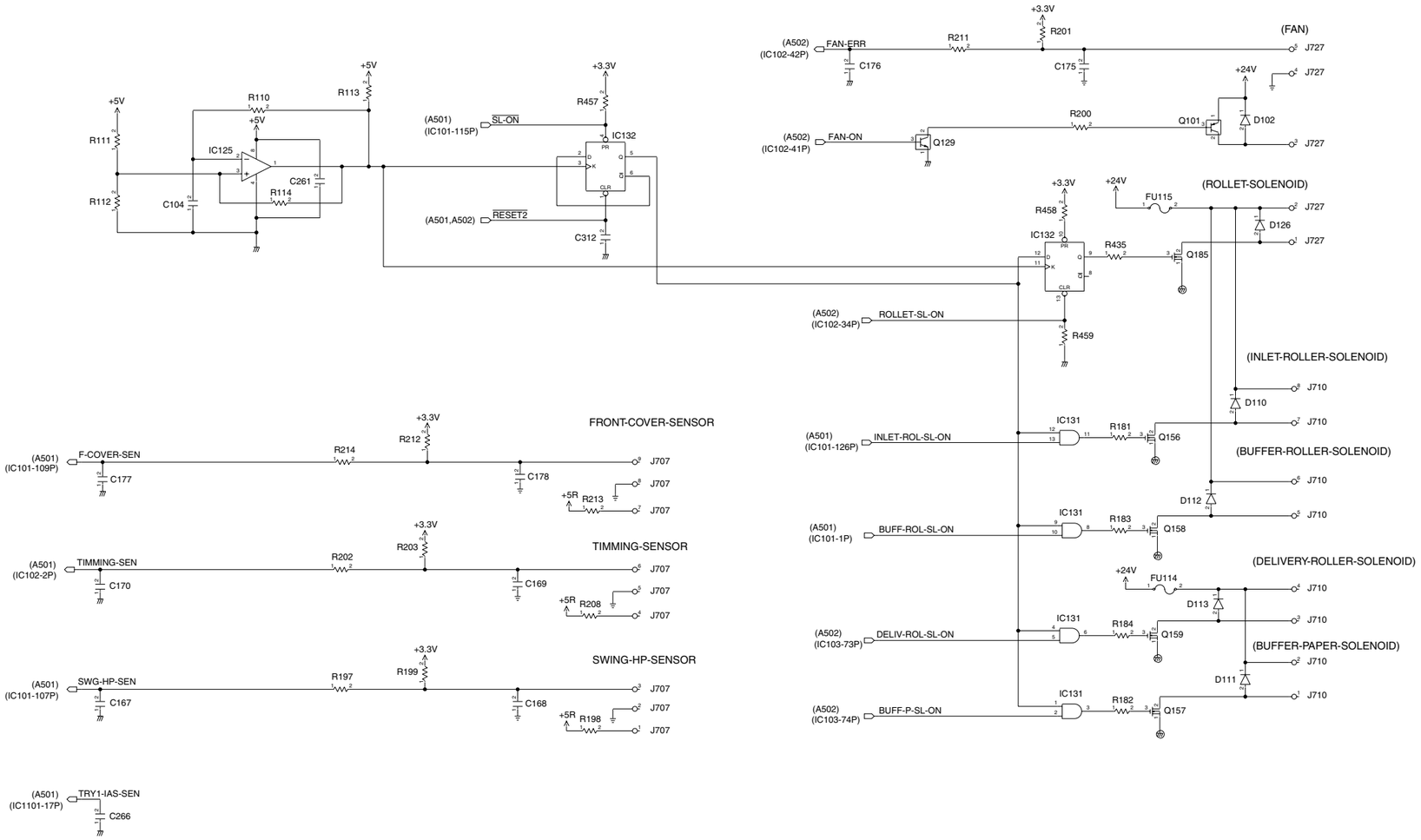
(FAN)
(A502)
(IC102-42P)
FAN-ERR
R211
R201
+3.3V
C176
C175
J727
+24V
(A502)
(IC102-41P)
FAN-ON
Q129
R200
Q101
D102
(ROLLET-SOLENOID)
FU115
R458
IC132
R435
Q185
D126
(A502)
(IC102-34P)
ROLLET-SL-ON
R459
(INLET-ROLLER-SOLENOID)
D110
IC131
R181
Q156
(A501)
(IC101-126P)
INLET-ROL-SL-ON
(BUFFER-ROLLER-SOLENOID)
D112
R183
Q158
(A501)
(IC101-1P)
BUFF-ROL-SL-ON
(DELIVERY-ROLLER-SOLENOID)
FU114
D113
R184
Q159
(A502)
(IC103-73P)
DELIV-ROL-SL-ON
(BUFFER-PAPER-SOLENOID)
D111
R182
Q157
(A502)
(IC103-74P)
BUFF-P-SL-ON
J710
+5V
R110
R113
R111
R112
IC125
C104
C261
R114
(A501)
(IC101-115P)
SL-ON
R457
IC132
(A501,A502)
RESET2
C312
FRONT-COVER-SENSOR
(A501)
(IC101-109P)
F-COVER-SEN
R214
R212
C177
C178
+5R
R213
J707
TIMMING-SENSOR
(A501)
(IC102-2P)
TIMMING-SEN
R202
R203
C170
C169
R208
SWING-HP-SENSOR
(A501)
(IC101-107P)
SWG-HP-SEN
R197
R199
C167
C168
R198
(A501)
(IC1101-17P)
TRY1-IAS-SEN
C266

F-1-5

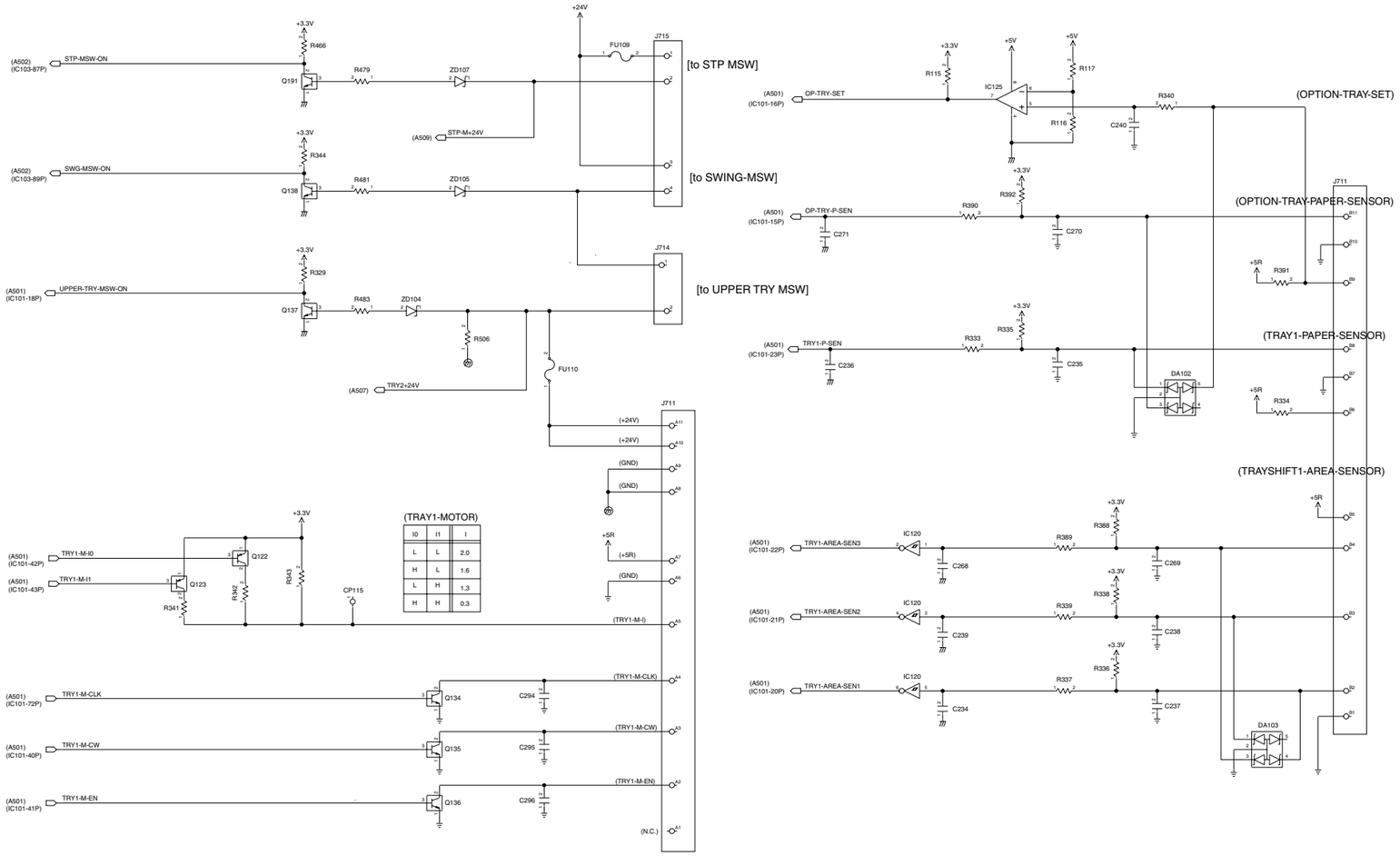
(A502) (IC103-87P) STP-MSW-ON
(A502) (IC103-89P) SWG-MSW-ON
(A501) (IC101-18P) UPPER-TRY-MSW-ON
(A509) STP-M+24V
(A507) TRY2+24V
[to STP MSW]
[to SWING-MSW]
[to UPPER TRY MSW]
(A501) (IC101-16P) OP-TRY-SET
(A501) (IC101-15P) OP-TRY-P-SEN
(A501) (IC101-23P) TRY1-P-SEN
(OPTION-TRAY-SET)
(OPTION-TRAY-PAPER-SENSOR)
(TRAY1-PAPER-SENSOR)
(TRAYSHIFT1-AREA-SENSOR)
(A501) (IC101-42P) TRY1-M-I0
(A501) (IC101-43P) TRY1-M-I1
(A501) (IC101-72P) TRY1-M-CLK
(A501) (IC101-40P) TRY1-M-CW
(A501) (IC101-41P) TRY1-M-EN
(A501) (IC101-22P) TRY1-AREA-SEN3
(A501) (IC101-21P) TRY1-AREA-SEN2
(A501) (IC101-20P) TRY1-AREA-SEN1
(TRAY1-MOTOR)
I0 I1 I
L L 2.0
H L 1.6
L H 1.3
H H 0.3
(N.C.)

F-1-6

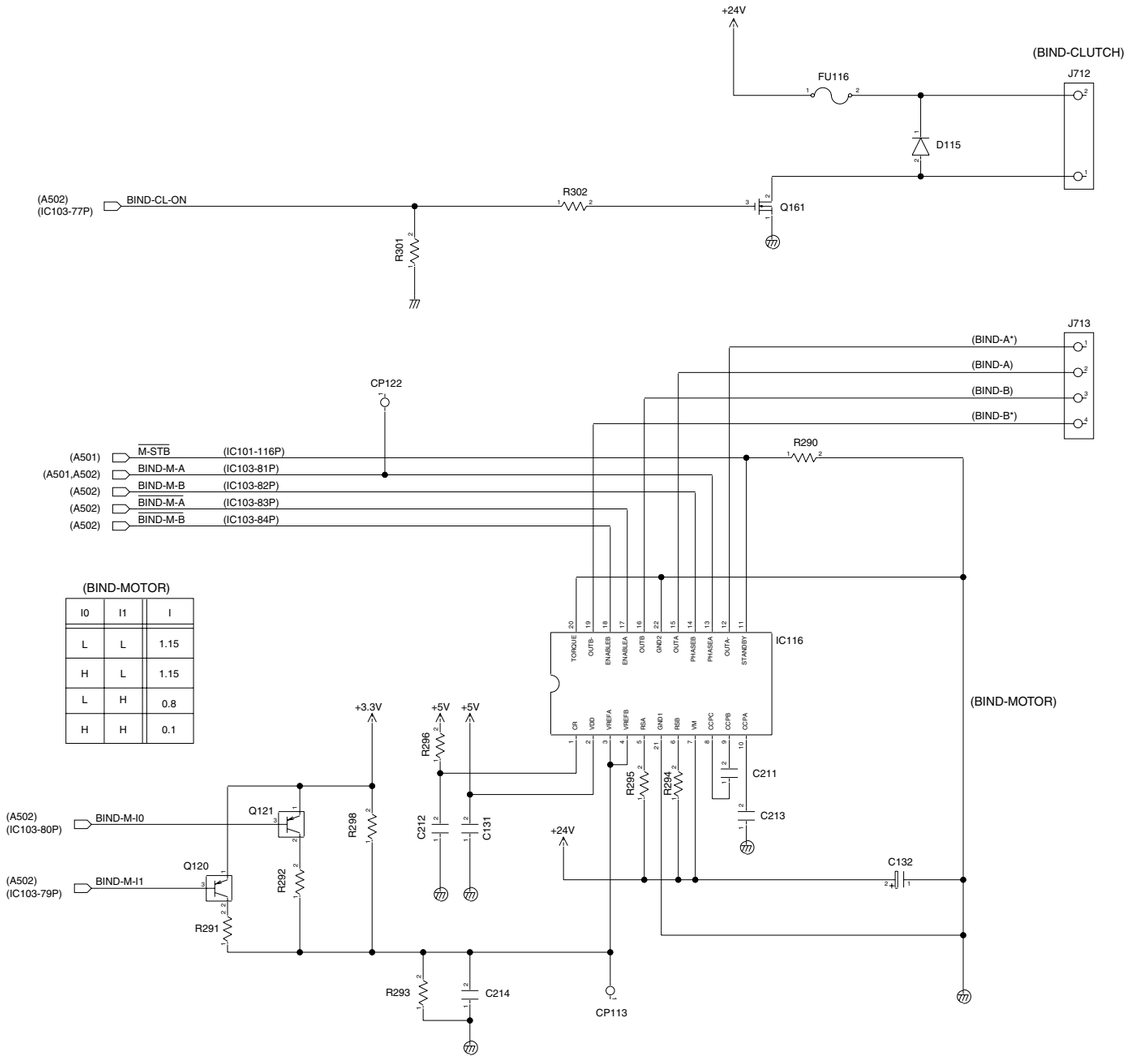

(BIND-MOTOR)		
I0	I1	I
L	L	1.15
H	L	1.15
L	H	0.8
H	H	0.1

F-1-7

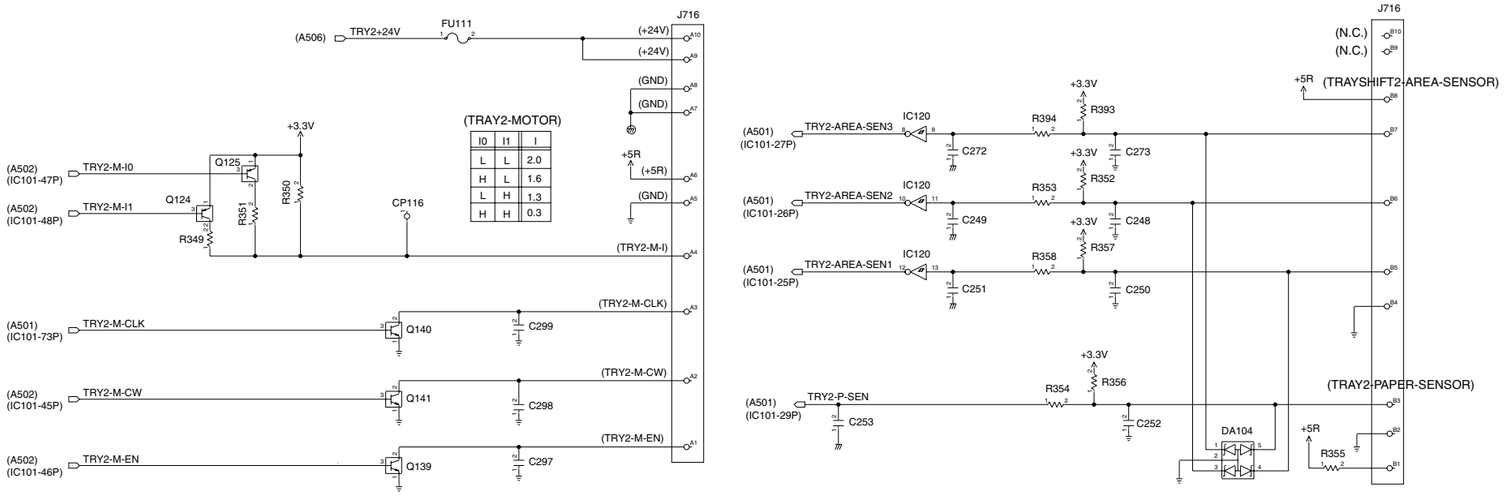
J716
(A506)
TRY2+24V
FU111
(+24V)
(+24V)
(GND)
(GND)
+3.3V
(TRAY2-MOTOR)
I0 I1 I
L L 2.0
H L 1.6
L H 1.3
H H 0.3
+5R
(+5R)
(GND)
(A502)
(IC101-47P)
TRY2-M-I0
Q125
Q124
(A502)
(IC101-48P)
TRY2-M-I1
R351
R350
R349
CP116
(TRY2-M-I)
(A501)
(IC101-73P)
TRY2-M-CLK
Q140
C299
(TRY2-M-CLK)
(A502)
(IC101-45P)
TRY2-M-CW
Q141
C298
(TRY2-M-CW)
(A502)
(IC101-46P)
TRY2-M-EN
Q139
C297
(TRY2-M-EN)
J716
(N.C.)
(N.C.)
+5R
(TRAYSHIFT2-AREA-SENSOR)
+3.3V
R393
(A501)
(IC101-27P)
TRY2-AREA-SEN3
IC120
R394
C272
+3.3V
C273
R352
(A501)
(IC101-26P)
TRY2-AREA-SEN2
IC120
R353
C249
+3.3V
C248
R357
(A501)
(IC101-25P)
TRY2-AREA-SEN1
IC120
R358
C251
C250
+3.3V
R356
(A501)
(IC101-29P)
TRY2-P-SEN
R354
C253
C252
(TRAY2-PAPER-SENSOR)
DA104
+5R
R355

F-1-8

Finisher Controller PCB（A509）

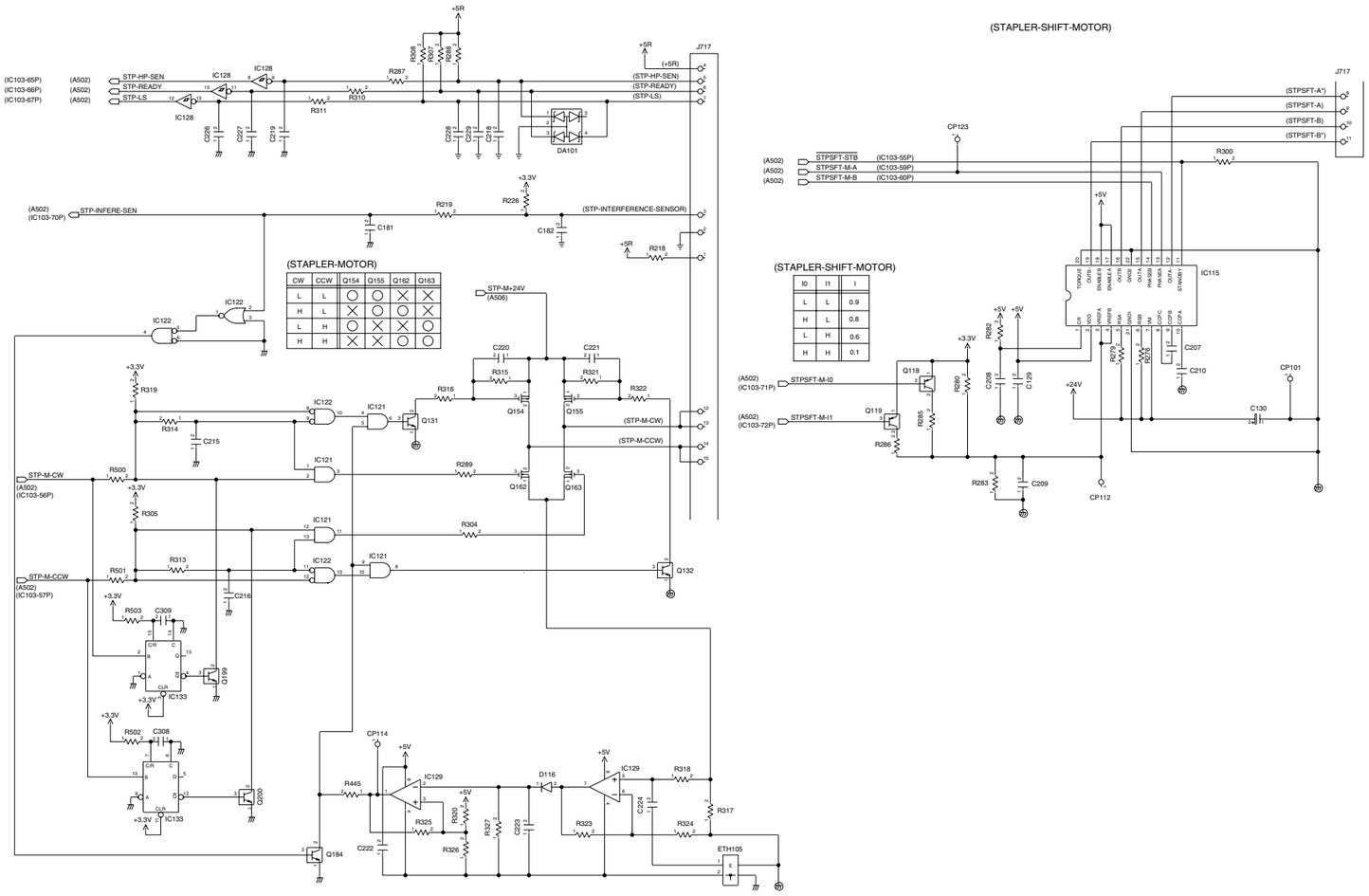

CW	CCW	Q154	Q155	Q162	Q163
L	L	○	○	×	×
H	L	×	○	○	×
L	H	○	×	×	○
H	H	×	×	○	○

I0	I1	I
L	L	0.9
H	L	0.8
L	H	0.6
H	H	0.1

F-1-9

Finisher Controller PCB（A510）

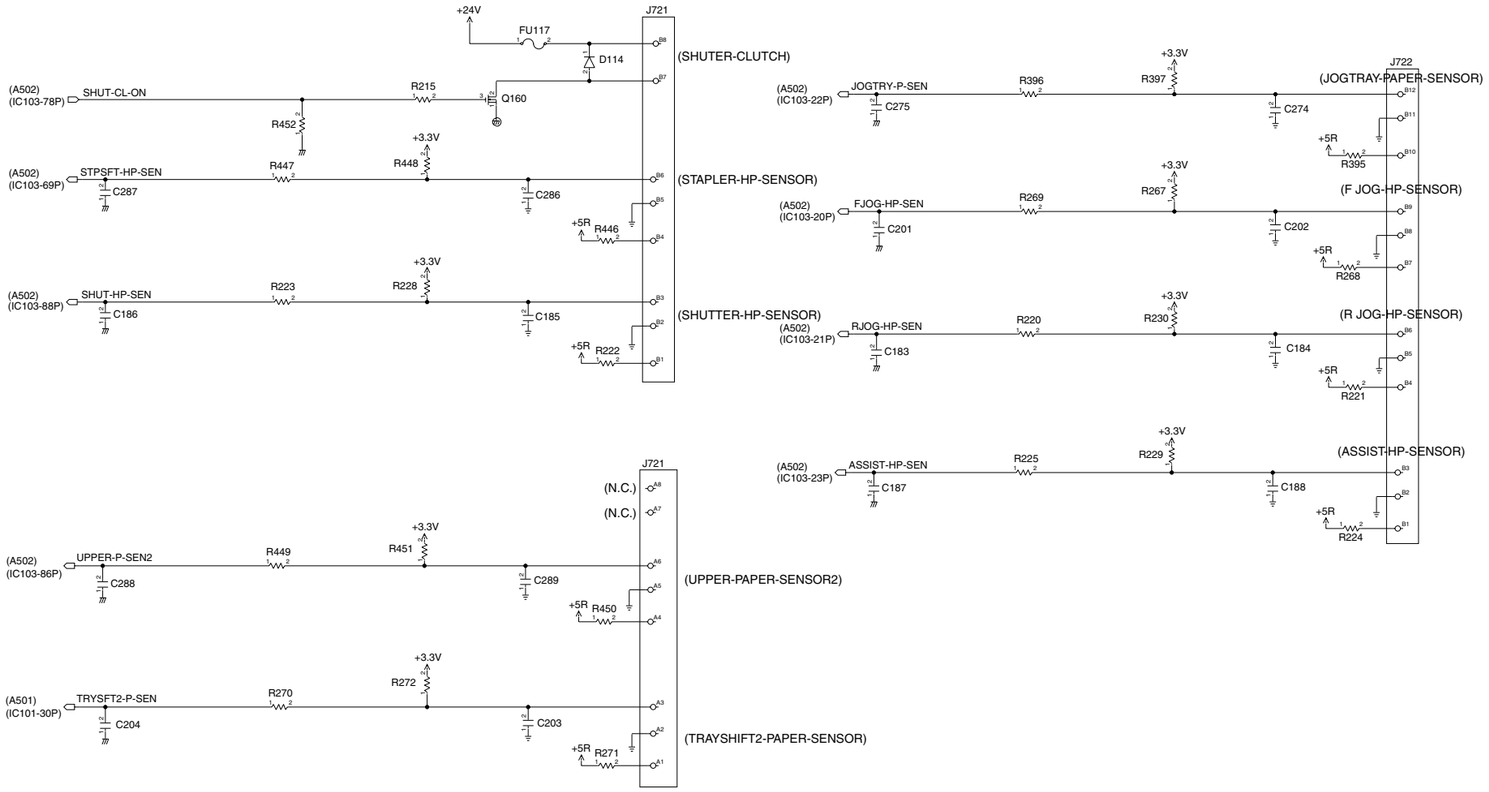

F-1-10

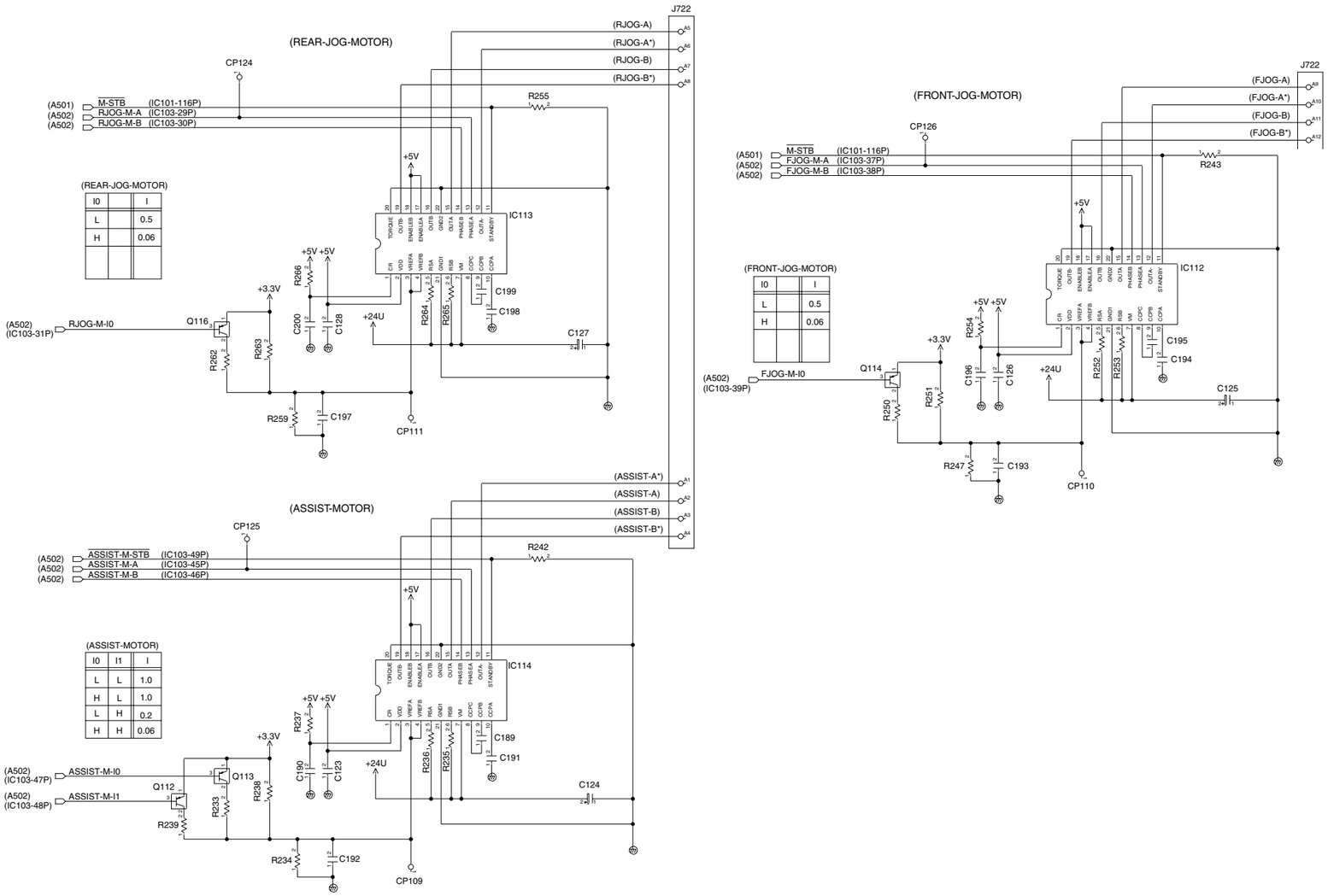
(REAR-JOG-MOTOR)
CP124
(A501) M-STB (IC101-116P)
(A502) RJOG-M-A (IC103-29P)
(A502) RJOG-M-B (IC103-30P)
(A502) (IC103-31P) RJOG-M-I0
Q116
R262
R263
R259
C197
CP111
R255
R266
C200
C128
+5V +5V
+3.3V
+24U
R264
R265
C199
C198
C127
IC113
J722
(RJOG-A)
(RJOG-A*)
(RJOG-B)
(RJOG-B*)
(REAR-JOG-MOTOR)
I0 | I
L | 0.5
H | 0.06
(FRONT-JOG-MOTOR)
CP126
(A501) M-STB (IC101-116P)
(A502) FJOG-M-A (IC103-37P)
(A502) FJOG-M-B (IC103-38P)
(A502) (IC103-39P) FJOG-M-I0
Q114
R250
R251
R247
C193
CP110
R243
R254
C196
C126
R252
R253
C195
C194
C125
IC112
J722
(FJOG-A)
(FJOG-A*)
(FJOG-B)
(FJOG-B*)
(FRONT-JOG-MOTOR)
I0 | I
L | 0.5
H | 0.06
(ASSIST-MOTOR)
CP125
(A502) ASSIST-M-STB (IC103-49P)
(A502) ASSIST-M-A (IC103-45P)
(A502) ASSIST-M-B (IC103-46P)
(A502) (IC103-47P) ASSIST-M-I0
(A502) (IC103-48P) ASSIST-M-I1
Q112
Q113
R239
R233
R238
R234
C192
CP109
R242
R237
C190
C123
R236
R235
C189
C191
C124
IC114
(ASSIST-A*)
(ASSIST-A)
(ASSIST-B)
(ASSIST-B*)
(ASSIST-MOTOR)
I0 | I1 | I
L | L | 1.0
H | L | 1.0
L | H | 0.2
H | H | 0.06

F-1-11

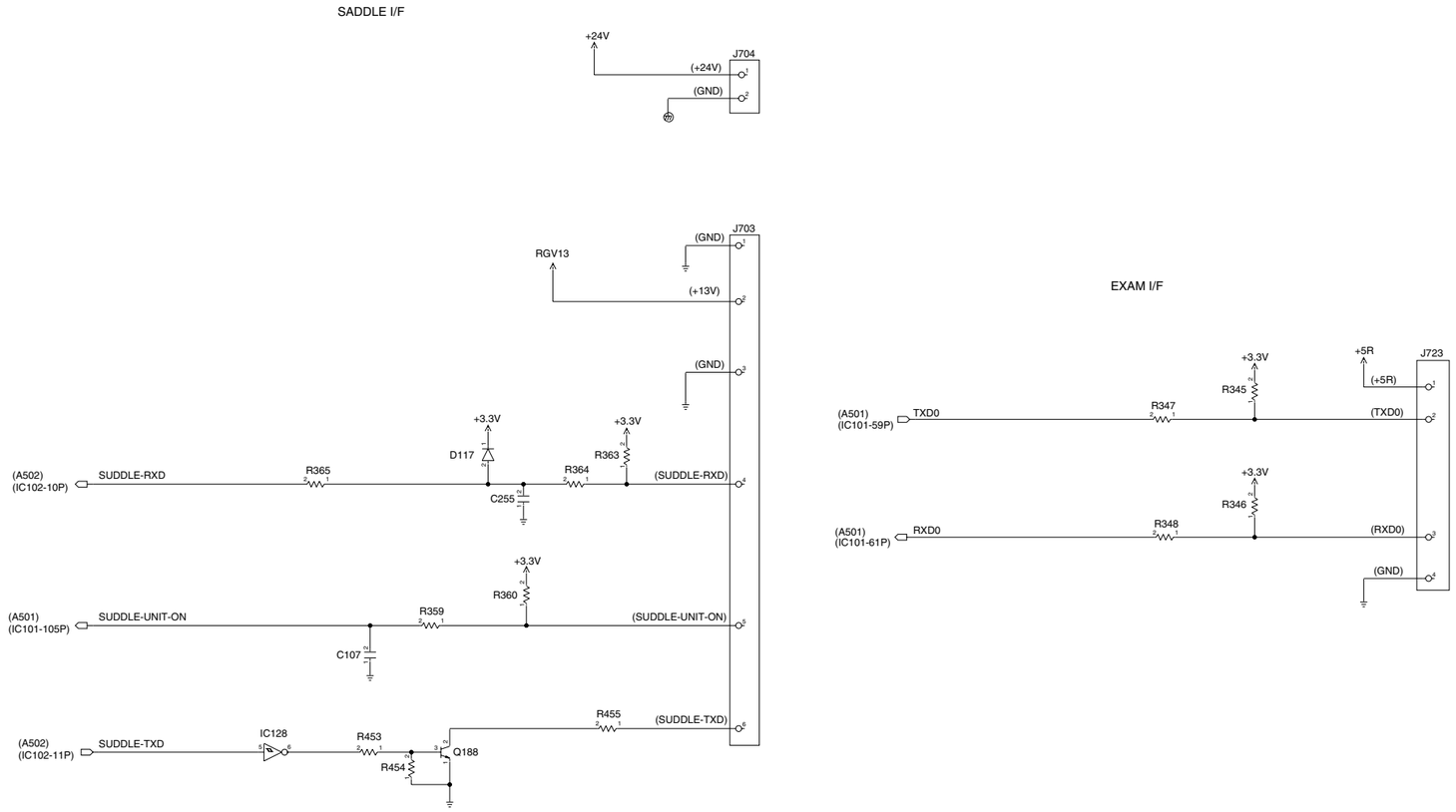
SADDLE I/F
+24V
J704
(+24V)
(GND)
J703
(GND)
RGV13
(+13V)
(GND)
+3.3V
D117
R363
(A502)
(IC102-10P)
SUDDLE-RXD
R365
R364
C255
(SUDDLE-RXD)
+3.3V
R360
(A501)
(IC101-105P)
SUDDLE-UNIT-ON
R359
C107
(SUDDLE-UNIT-ON)
R455
(SUDDLE-TXD)
(A502)
(IC102-11P)
SUDDLE-TXD
IC128
R453
R454
Q188
EXAM I/F
+3.3V
+5R
J723
R345
(+5R)
(A501)
(IC101-59P)
TXD0
R347
(TXD0)
+3.3V
R346
(A501)
(IC101-61P)
RXD0
R348
(RXD0)
(GND)

F-1-12

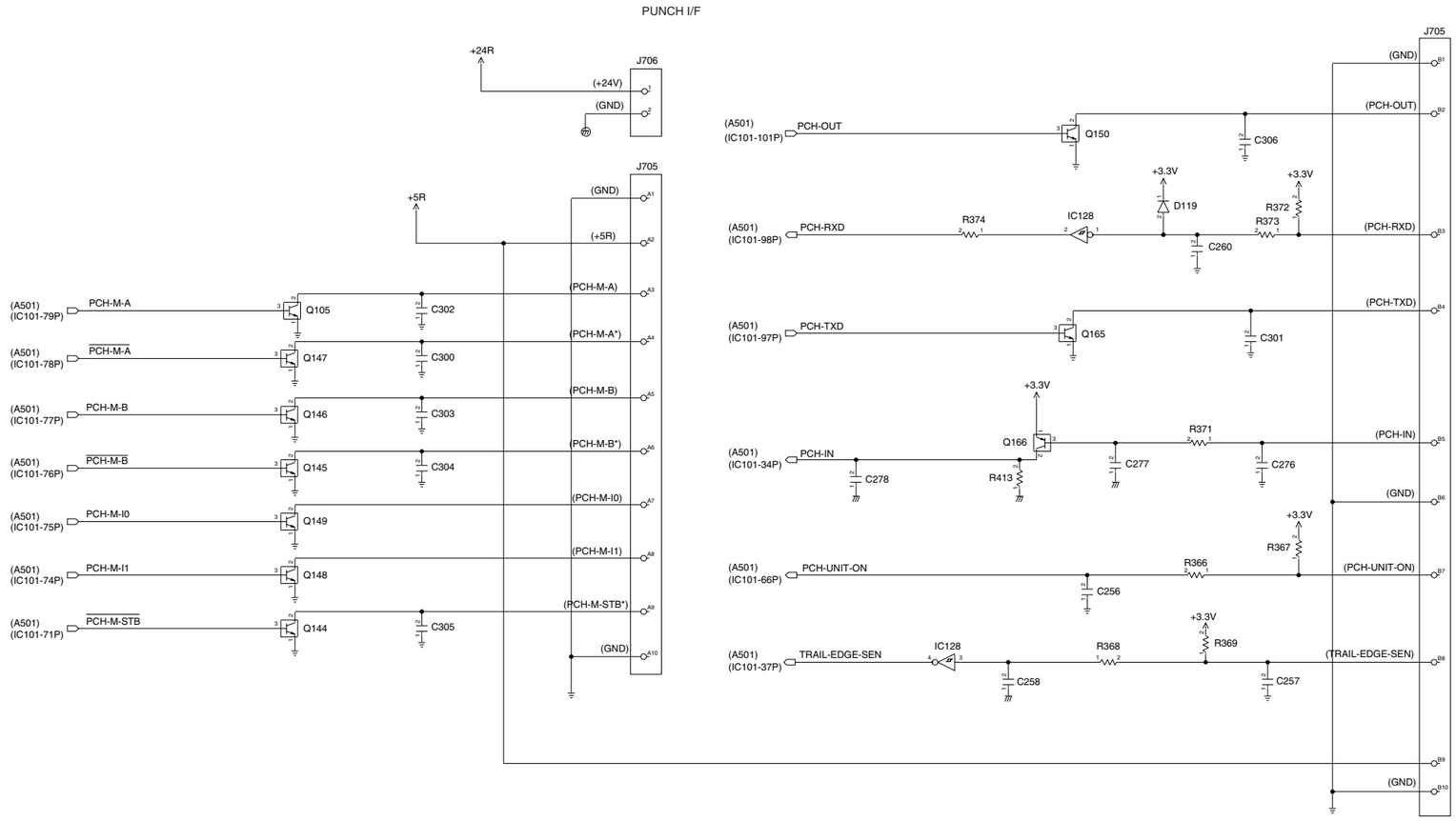
PUNCH I/F
J706
(+24V)
(GND)
+24R
J705
(GND)
(+5R)
+5R
(PCH-M-A)
(PCH-M-A*)
(PCH-M-B)
(PCH-M-B*)
(PCH-M-I0)
(PCH-M-I1)
(PCH-M-STB*)
(GND)
(A501)
(IC101-79P)
PCH-M-A
Q105
C302
(A501)
(IC101-78P)
PCH-M-A
Q147
C300
(A501)
(IC101-77P)
PCH-M-B
Q146
C303
(A501)
(IC101-76P)
PCH-M-B
Q145
C304
(A501)
(IC101-75P)
PCH-M-I0
Q149
(A501)
(IC101-74P)
PCH-M-I1
Q148
(A501)
(IC101-71P)
PCH-M-STB
Q144
C305
(A501)
(IC101-101P)
PCH-OUT
Q150
C306
(A501)
(IC101-98P)
PCH-RXD
R374
IC128
+3.3V
D119
C260
R372
R373
(A501)
(IC101-97P)
PCH-TXD
Q165
C301
(A501)
(IC101-34P)
PCH-IN
C278
Q166
R413
C277
R371
C276
(A501)
(IC101-66P)
PCH-UNIT-ON
C256
R366
R367
(A501)
(IC101-37P)
TRAIL-EDGE-SEN
IC128
C258
R368
R369
C257
(GND)
(PCH-OUT)
(PCH-RXD)
(PCH-TXD)
(PCH-IN)
(GND)
(PCH-UNIT-ON)
(TRAIL-EDGE-SEN)
(GND)

F-1-13

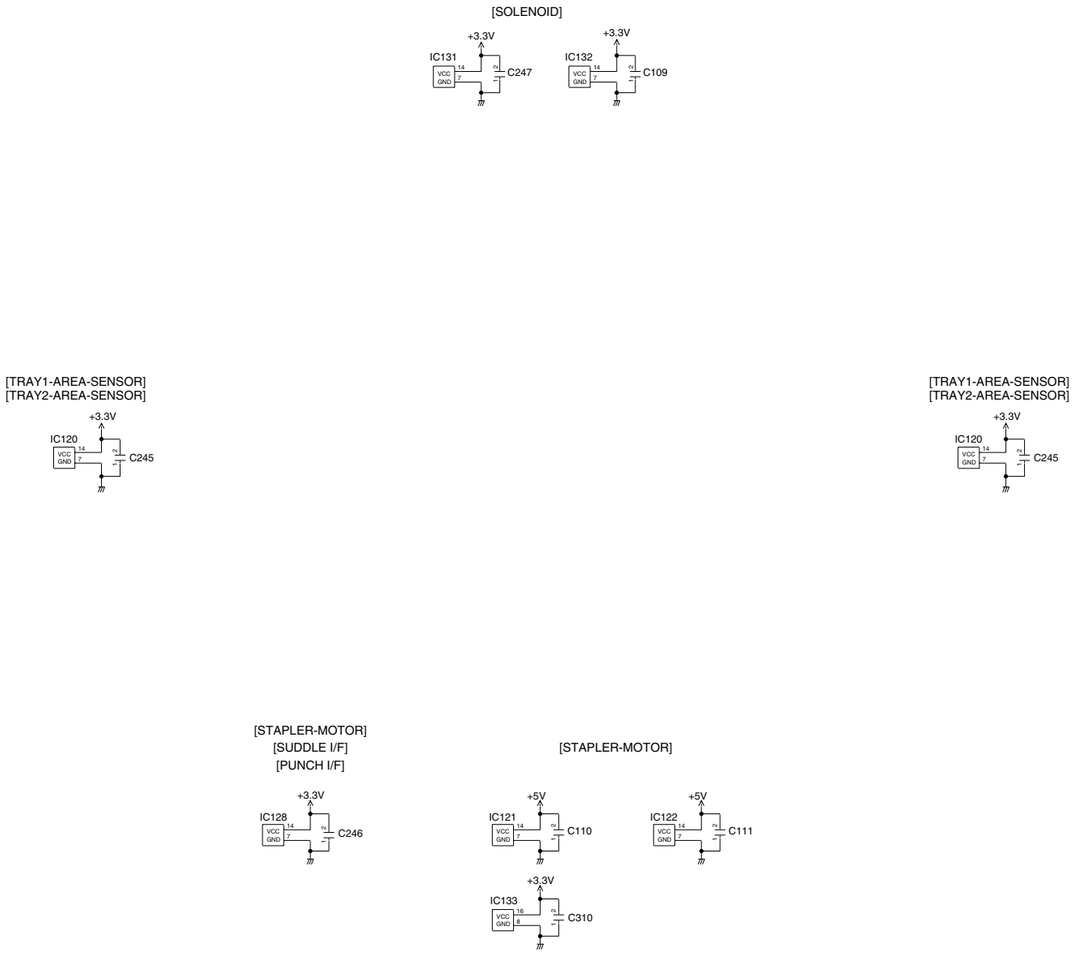
[SOLENOID]
+3.3V
IC131
VCC
GND
14
7
C247
+3.3V
IC132
VCC
GND
14
7
C109
[TRAY1-AREA-SENSOR]
[TRAY2-AREA-SENSOR]
+3.3V
IC120
VCC
GND
14
7
C245
[TRAY1-AREA-SENSOR]
[TRAY2-AREA-SENSOR]
+3.3V
IC120
VCC
GND
14
7
C245
[STAPLER-MOTOR]
[SUDDLE I/F]
[PUNCH I/F]
+3.3V
IC128
VCC
GND
14
7
C246
[STAPLER-MOTOR]
+5V
IC121
VCC
GND
14
7
C110
+5V
IC122
VCC
GND
14
7
C111
+3.3V
IC133
VCC
GND
16
8
C310

F-1-14

2 Stapler PCB 1

Stapler PCB1

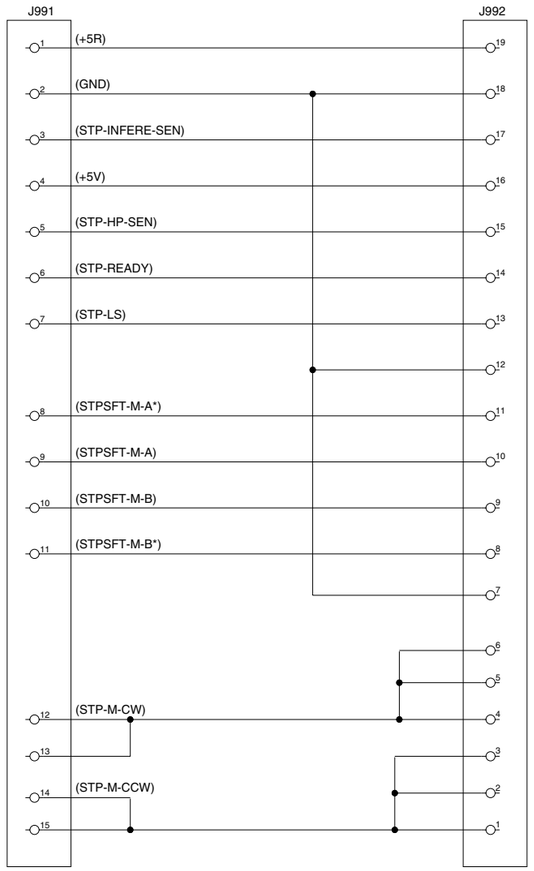

F-2-1

3 Stapler PCB 2

Stapler PCB2

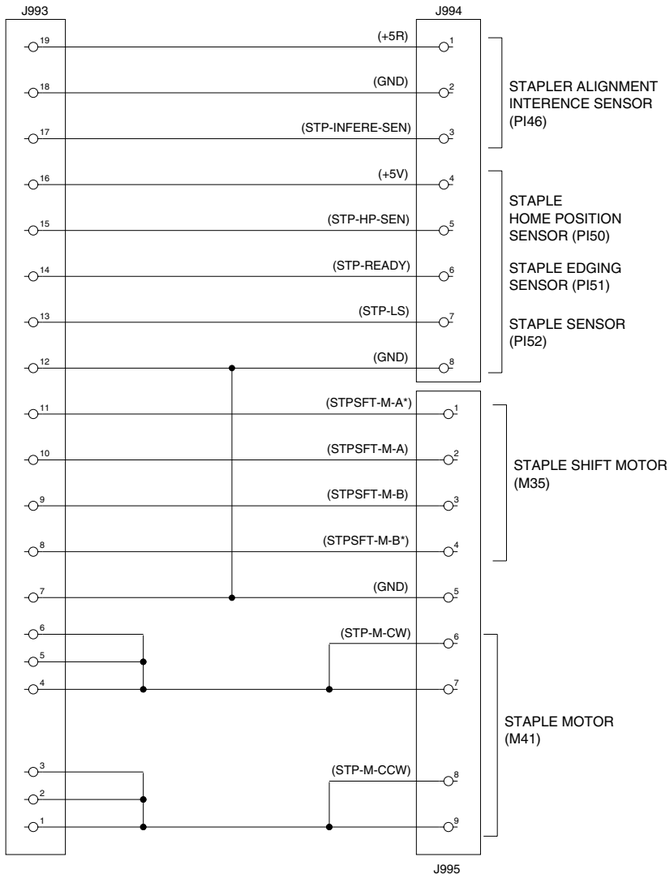

F-3-1

4 Tray2 Shift Area Sensor PCB

Tray1/Tray2 Shift Area Sensor PCB

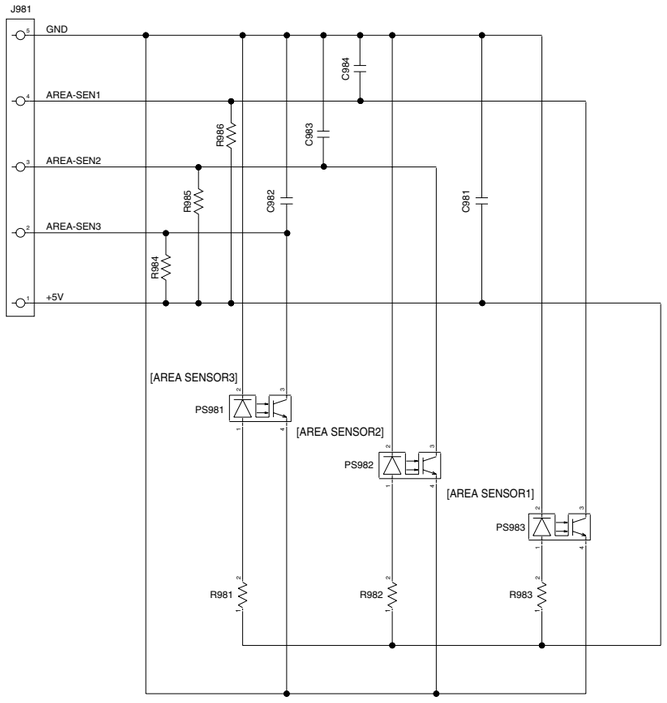

F-4-1

5 Tray1/Tray2 Driver PCB

Tray1/Tray2 Driver PCB

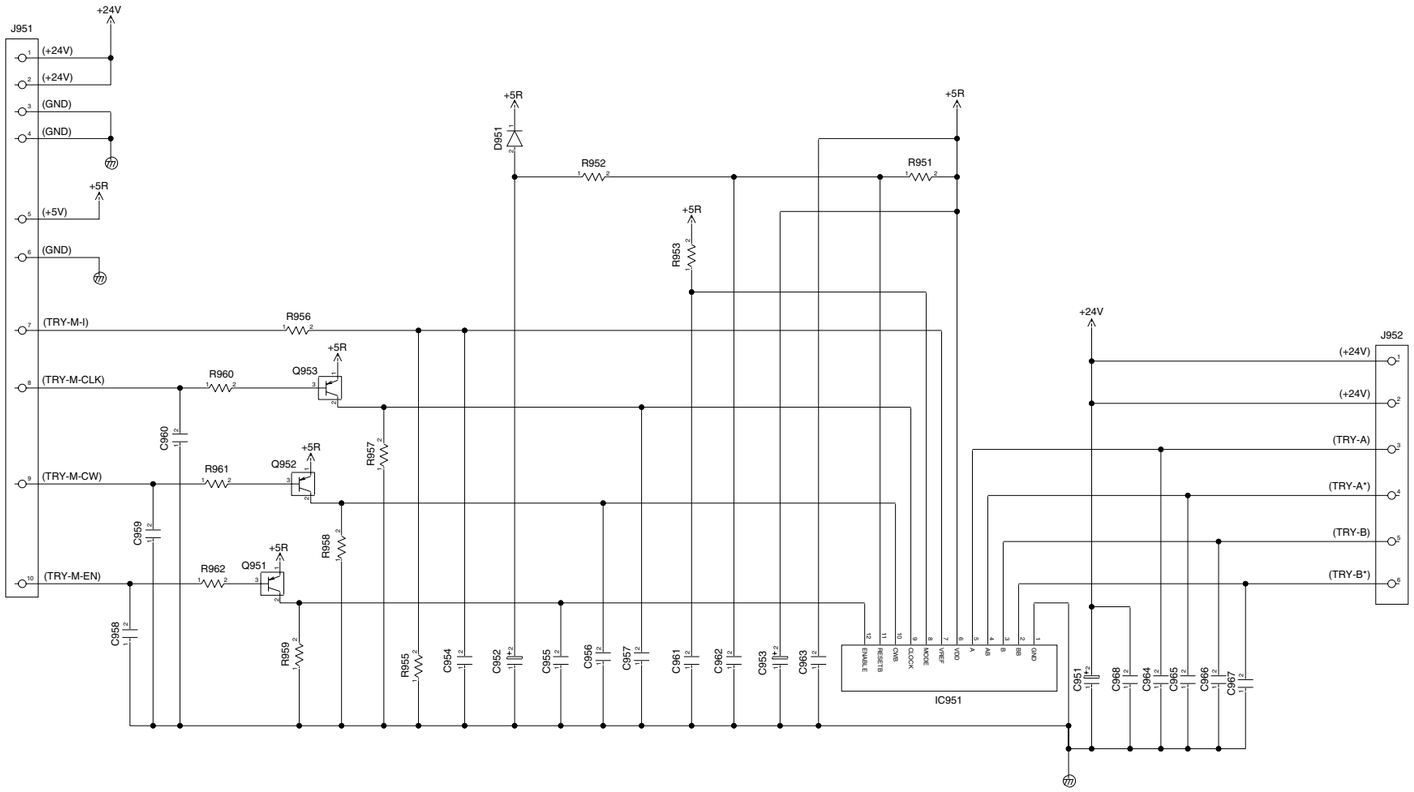

F-5-1

6 Saddle Stitcher Controller PCB

Saddle Stitcher Controller PCB（A501）

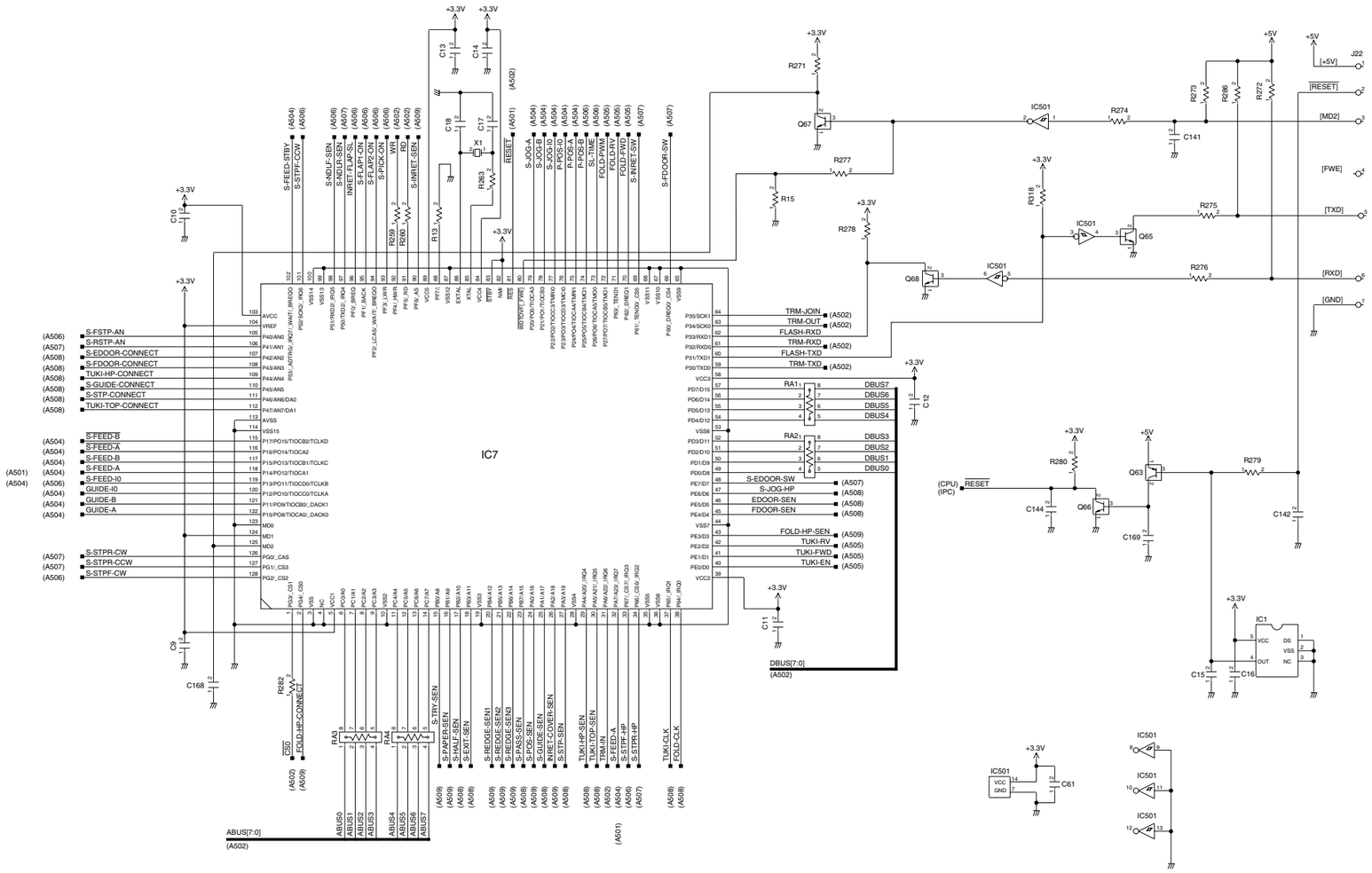

F-6-1

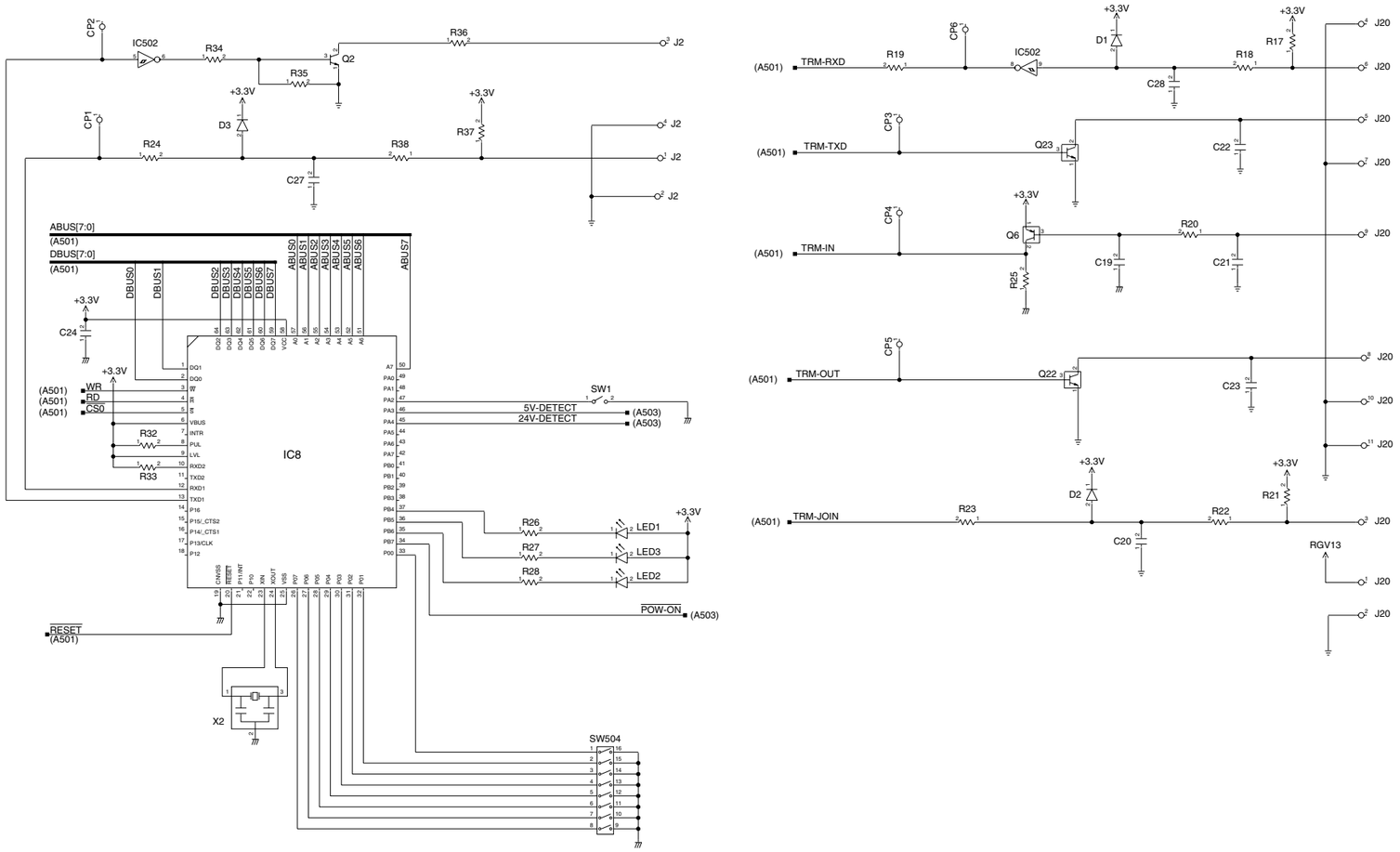
IC502
R34
R35
R36
Q2
J2
CP2
CP1
D3
+3.3V
R24
R38
R37
C27
ABUS[7:0]
(A501)
DBUS[7:0]
(A501)
C24
IC8
WR
RD
CS0
R32
R33
SW1
5V-DETECT
24V-DETECT
(A503)
R26
R27
R28
LED1
LED3
LED2
POW-ON
RESET
X2
SW504
CP6
CP3
CP4
CP5
TRM-RXD
TRM-TXD
TRM-IN
TRM-OUT
TRM-JOIN
R19
R18
R17
D1
C28
Q23
C22
Q6
R20
R25
C19
C21
Q22
C23
D2
R23
R22
R21
C20
RGV13
J20

F-6-2

Saddle Stitcher Controller PCB（A503）

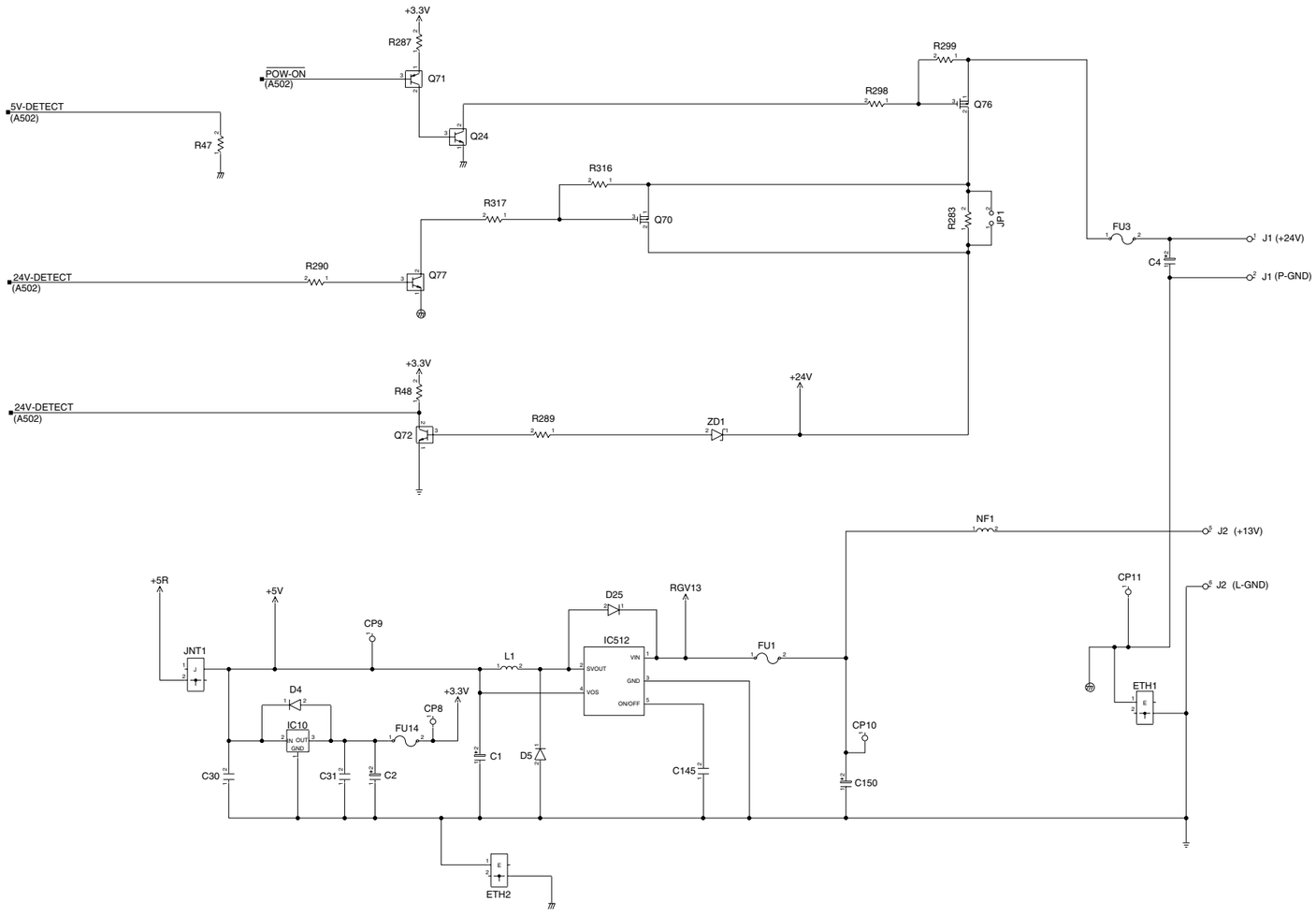

F-6-3

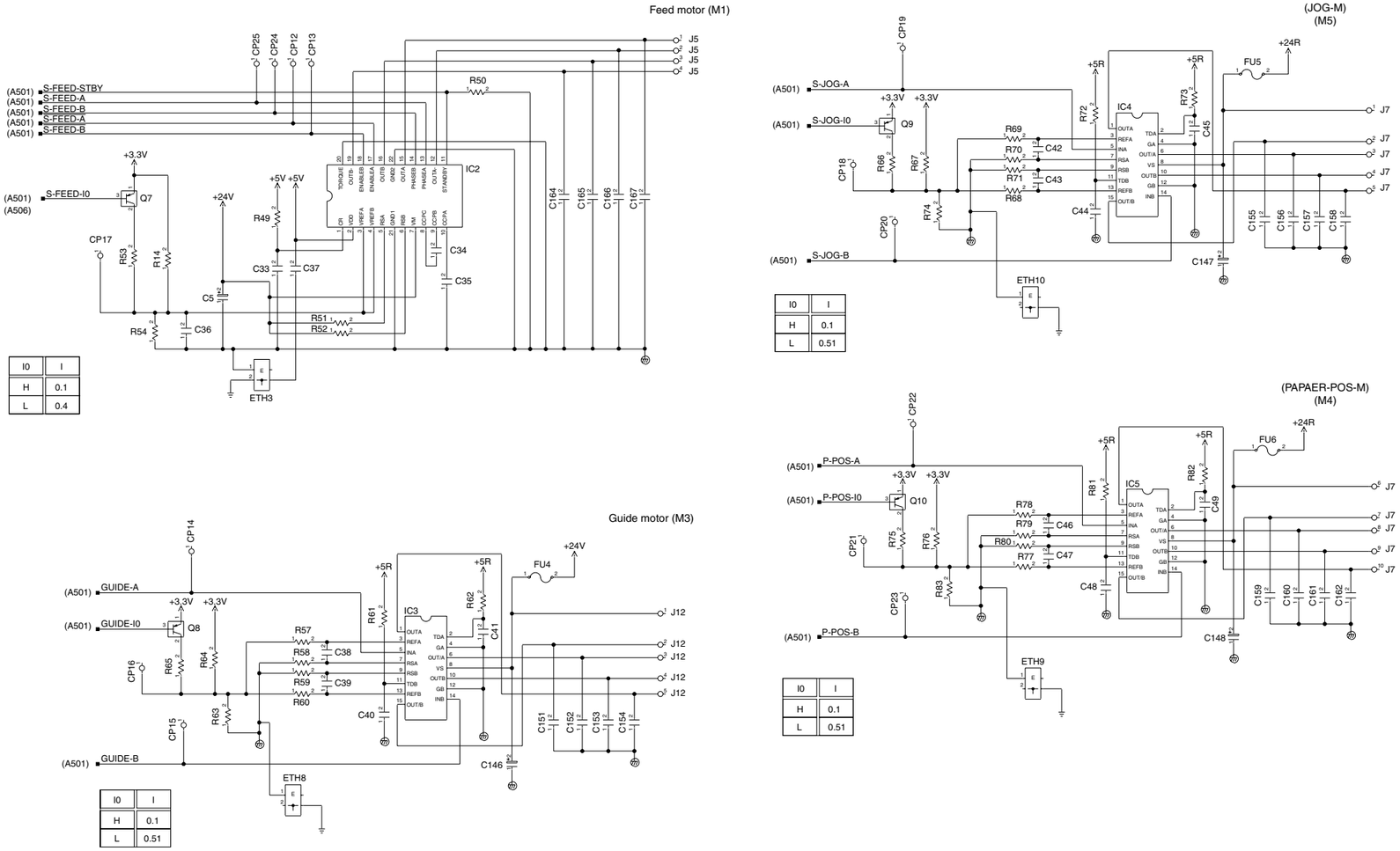
Feed motor (M1)
(JOG-M)
(M5)
(PAPAER-POS-M)
(M4)
Guide motor (M3)
S-FEED-STBY
S-FEED-A
S-FEED-B
S-FEED-I0
S-JOG-A
S-JOG-I0
S-JOG-B
P-POS-A
P-POS-I0
P-POS-B
GUIDE-A
GUIDE-I0
GUIDE-B
IC2
IC3
IC4
IC5
ETH3
ETH8
ETH9
ETH10
FU4
FU5
FU6
+24R
+24V
+5R
+3.3V
+5V
J5
J7
J12
I0 | I
H | 0.1
L | 0.4
I0 | I
H | 0.1
L | 0.51

F-6-4

Saddle Stitcher Controller PCB（A505）

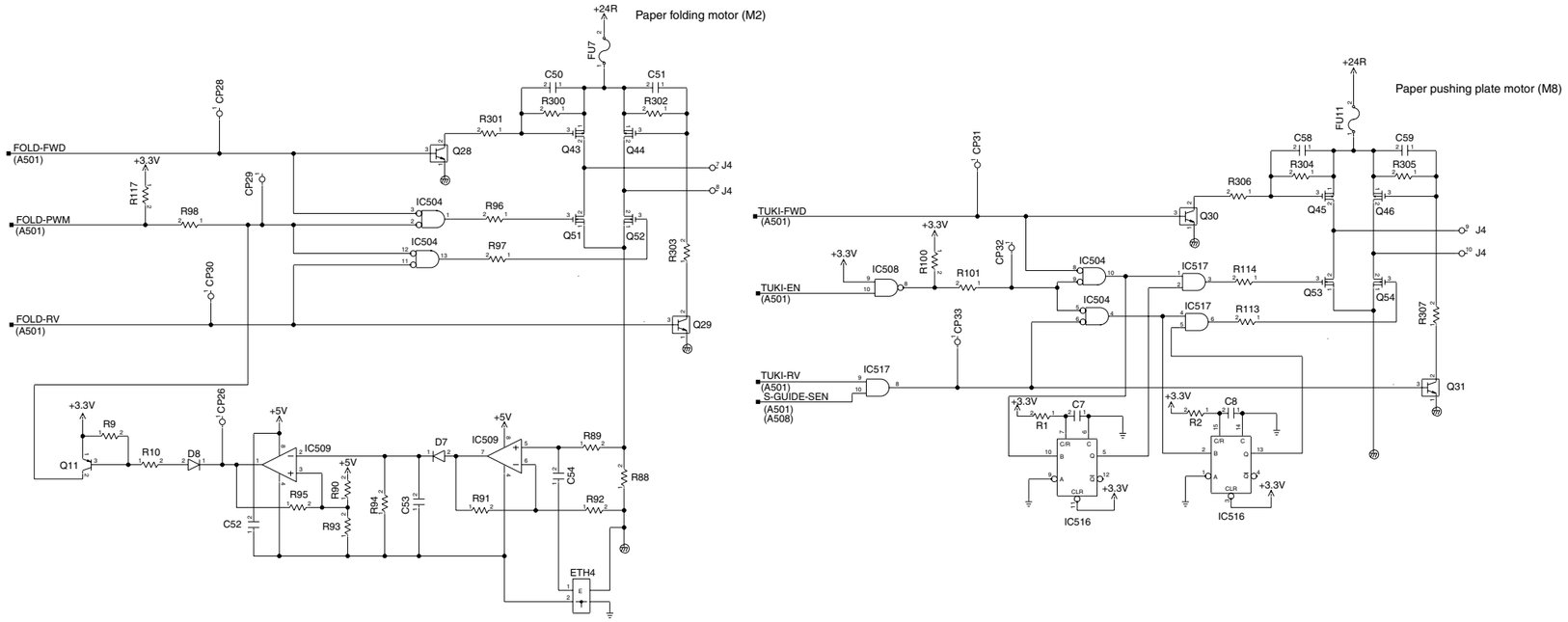

FWD	RV	PWM	Q43	Q44	Q51	Q52	
H	H	L	○	○	×	×	
H	H	H	○	○	×	×	
H	L	L	○	×	×	○	(CW)
H	L	H	○	×	×	×	(F.H)
L	H	L	×	○	○	×	(CCW)
L	H	H	×	○	×	×	(F.H)
L	L	L	×	×	○	○	
L	L	H	×	×	×	×	

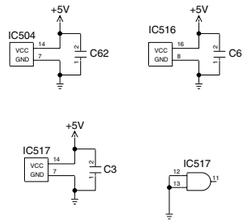

FWD	RV	EN	Q45	Q46	Q53	Q54	
H	H	H	○	○	×	×	
H	H	L	○	○	×	×	
H	L	H	○	×	×	○	(CW)
H	L	L	○	×	×	×	(F.H)
L	H	H	×	○	○	×	(CCW)
L	H	L	×	○	×	×	(F.H)
L	L	H	×	×	○	○	(S.B)
L	L	L	×	×	×	×	

F-6-5

Saddle Stitcher Controller PCB（A506）

CW	CCW	Q47	Q48	Q56	Q55	
L	L	○	○	X	X	
L	H	○	X	X	○	(CW)
H	L	X	○	○	X	(CCW)
H	H	X	X	○	○	

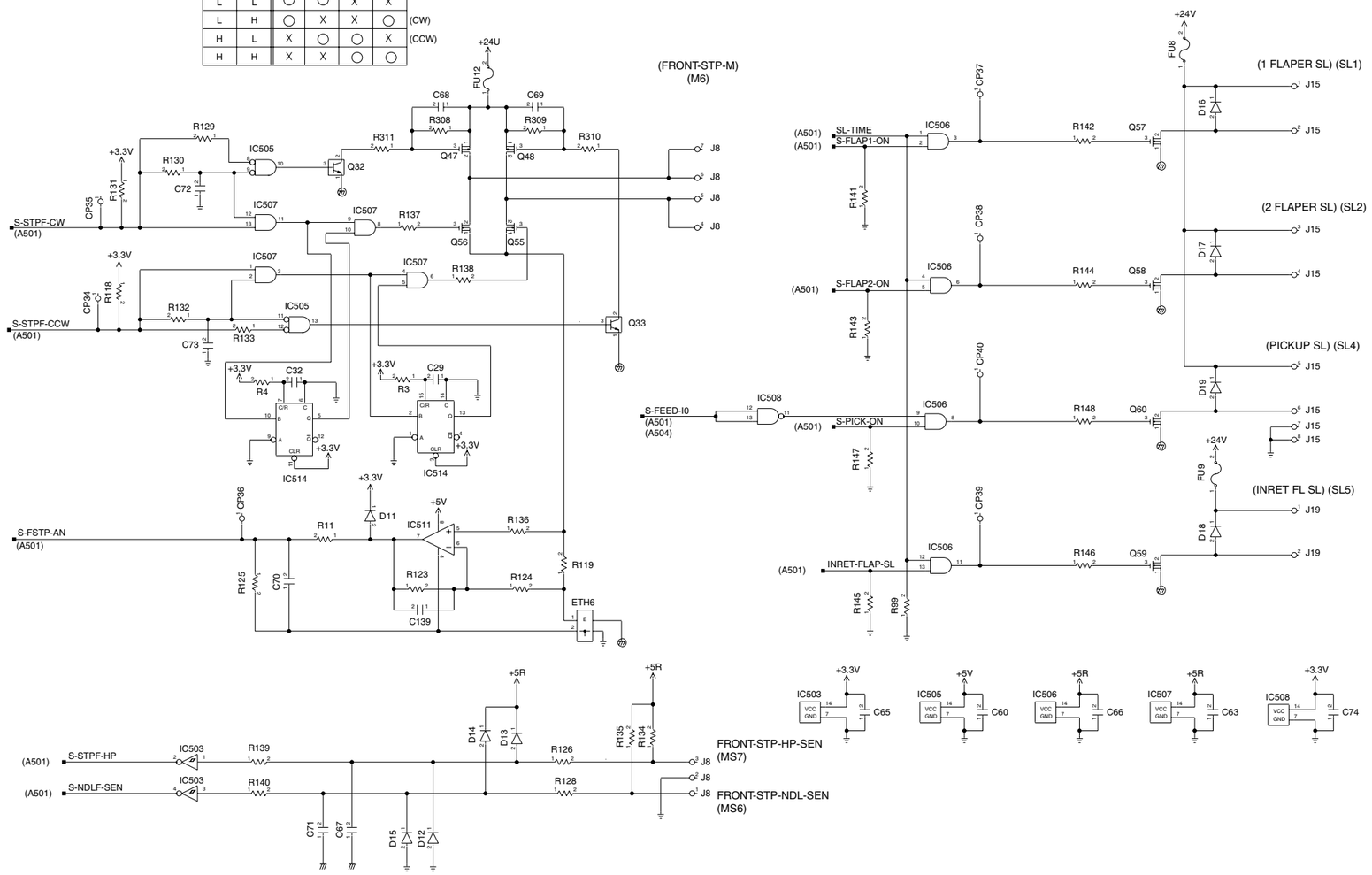

F-6-6

Saddle Stitcher Controller PCB（A507）

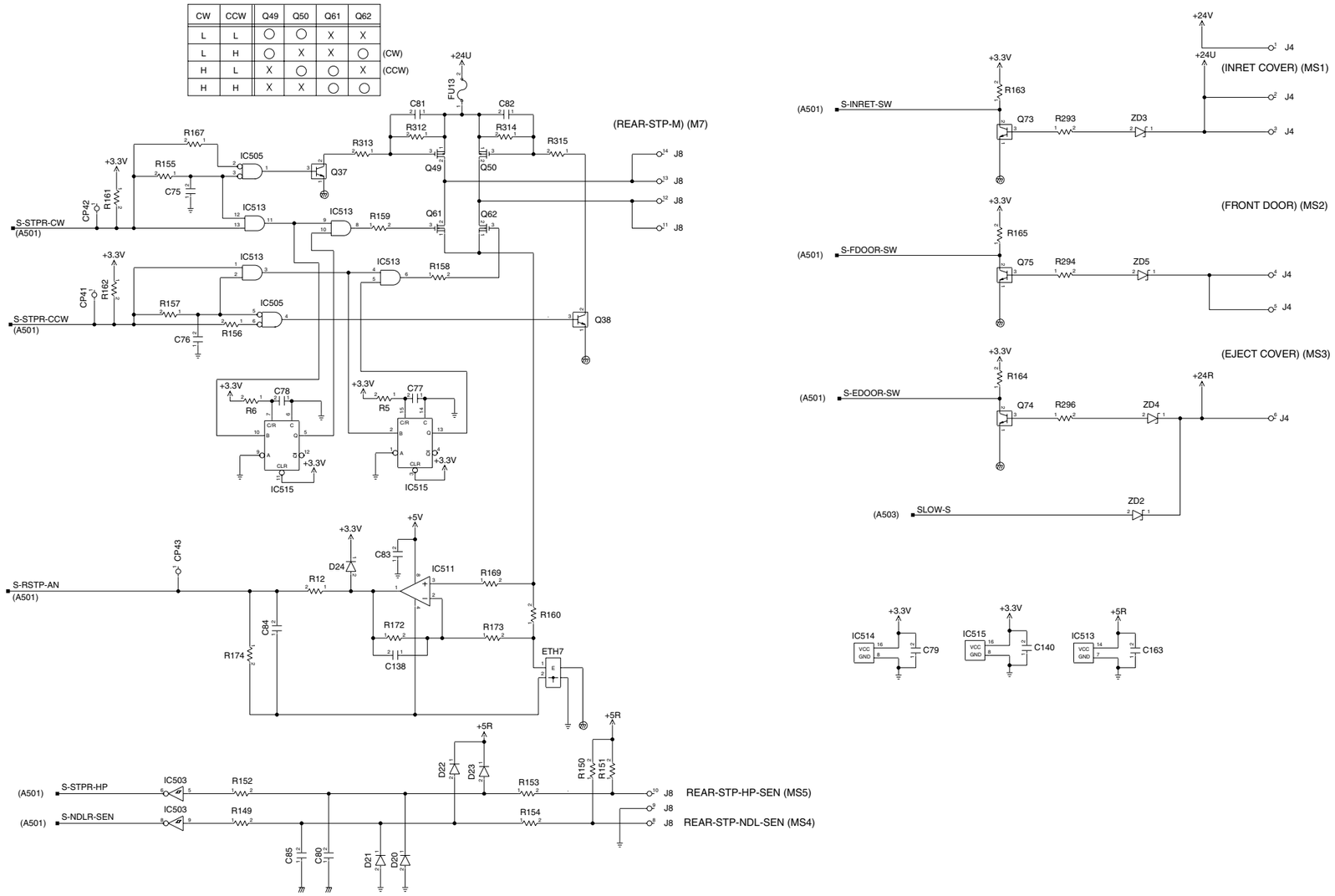

F-6-7

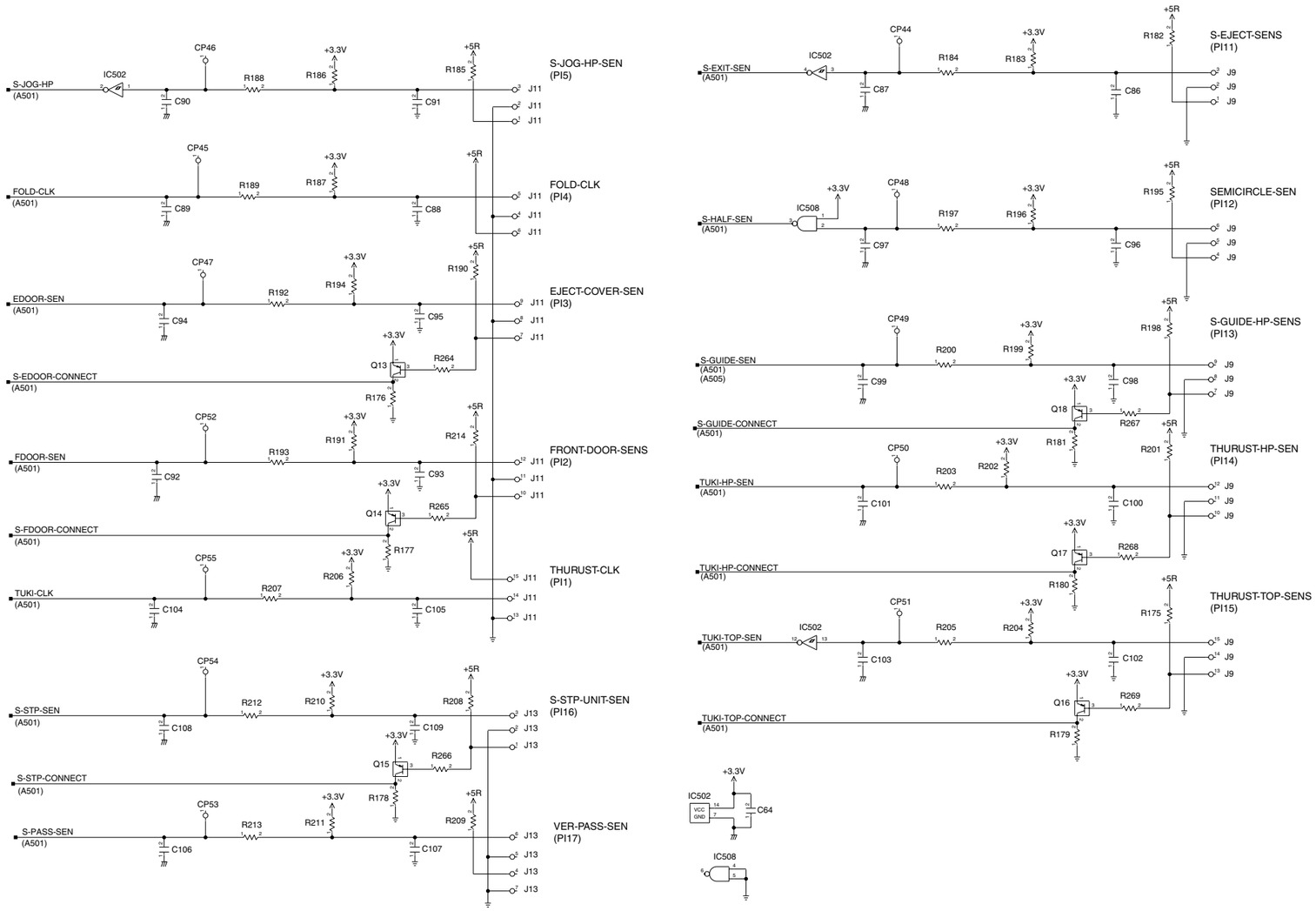
S-JOG-HP (A501)
S-JOG-HP-SEN (PI5)
FOLD-CLK (A501)
FOLD-CLK (PI4)
EDOOR-SEN (A501)
EJECT-COVER-SEN (PI3)
S-EDOOR-CONNECT (A501)
FDOOR-SEN (A501)
FRONT-DOOR-SENS (PI2)
S-FDOOR-CONNECT (A501)
TUKI-CLK (A501)
THURUST-CLK (PI1)
S-STP-SEN (A501)
S-STP-UNIT-SEN (PI16)
S-STP-CONNECT (A501)
S-PASS-SEN (A501)
VER-PASS-SEN (PI17)
S-EXIT-SEN (A501)
S-EJECT-SENS (PI11)
S-HALF-SEN (A501)
SEMICIRCLE-SEN (PI12)
S-GUIDE-SEN (A501) (A505)
S-GUIDE-HP-SENS (PI13)
S-GUIDE-CONNECT (A501)
TUKI-HP-SEN (A501)
THURUST-HP-SEN (PI14)
TUKI-HP-CONNECT (A501)
TUKI-TOP-SEN (A501)
THURUST-TOP-SENS (PI15)
TUKI-TOP-CONNECT (A501)
IC502
IC508
VCC
GND

F-6-8

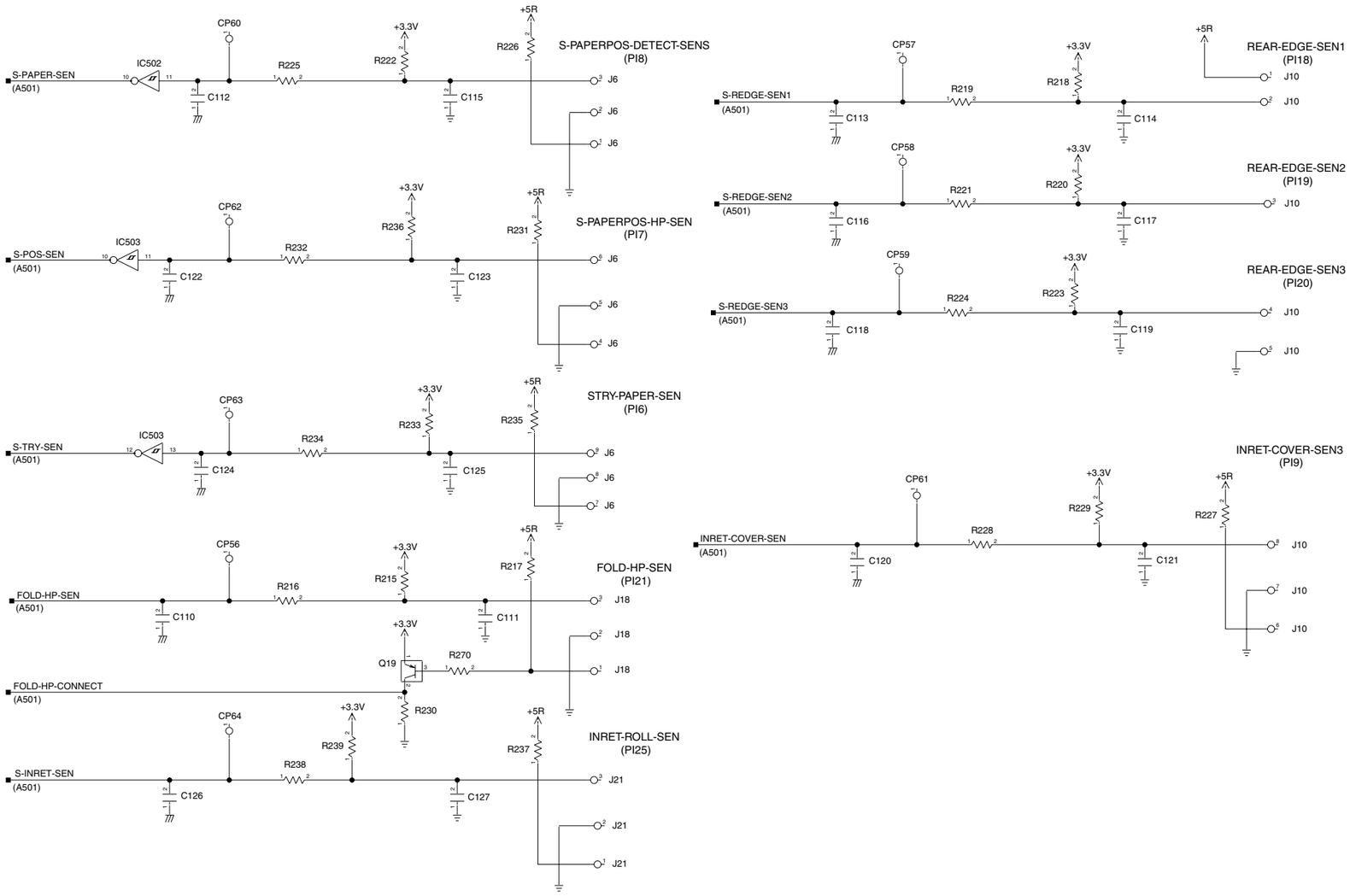
S-PAPER-SEN
(A501)
IC502
CP60
R225
+3.3V
R222
+5R
R226
C112
C115
S-PAPERPOS-DETECT-SENS
(PI8)
J6
S-POS-SEN
(A501)
IC503
CP62
R232
R236
R231
C122
C123
S-PAPERPOS-HP-SEN
(PI7)
S-TRY-SEN
(A501)
CP63
R234
R233
R235
C124
C125
STRY-PAPER-SEN
(PI6)
FOLD-HP-SEN
(A501)
CP56
R216
R215
R217
C110
C111
FOLD-HP-SEN
(PI21)
J18
Q19
R270
FOLD-HP-CONNECT
(A501)
R230
S-INRET-SEN
(A501)
CP64
R238
R239
R237
C126
C127
INRET-ROLL-SEN
(PI25)
J21
S-REDGE-SEN1
(A501)
CP57
R219
R218
C113
C114
REAR-EDGE-SEN1
(PI18)
J10
S-REDGE-SEN2
(A501)
CP58
R221
R220
C116
C117
REAR-EDGE-SEN2
(PI19)
S-REDGE-SEN3
(A501)
CP59
R224
R223
C118
C119
REAR-EDGE-SEN3
(PI20)
INRET-COVER-SEN
(A501)
CP61
R228
R229
R227
C120
C121
INRET-COVER-SEN3
(PI9)

F-6-9

7 Saddle Driver PCB

Saddle Driver PCB

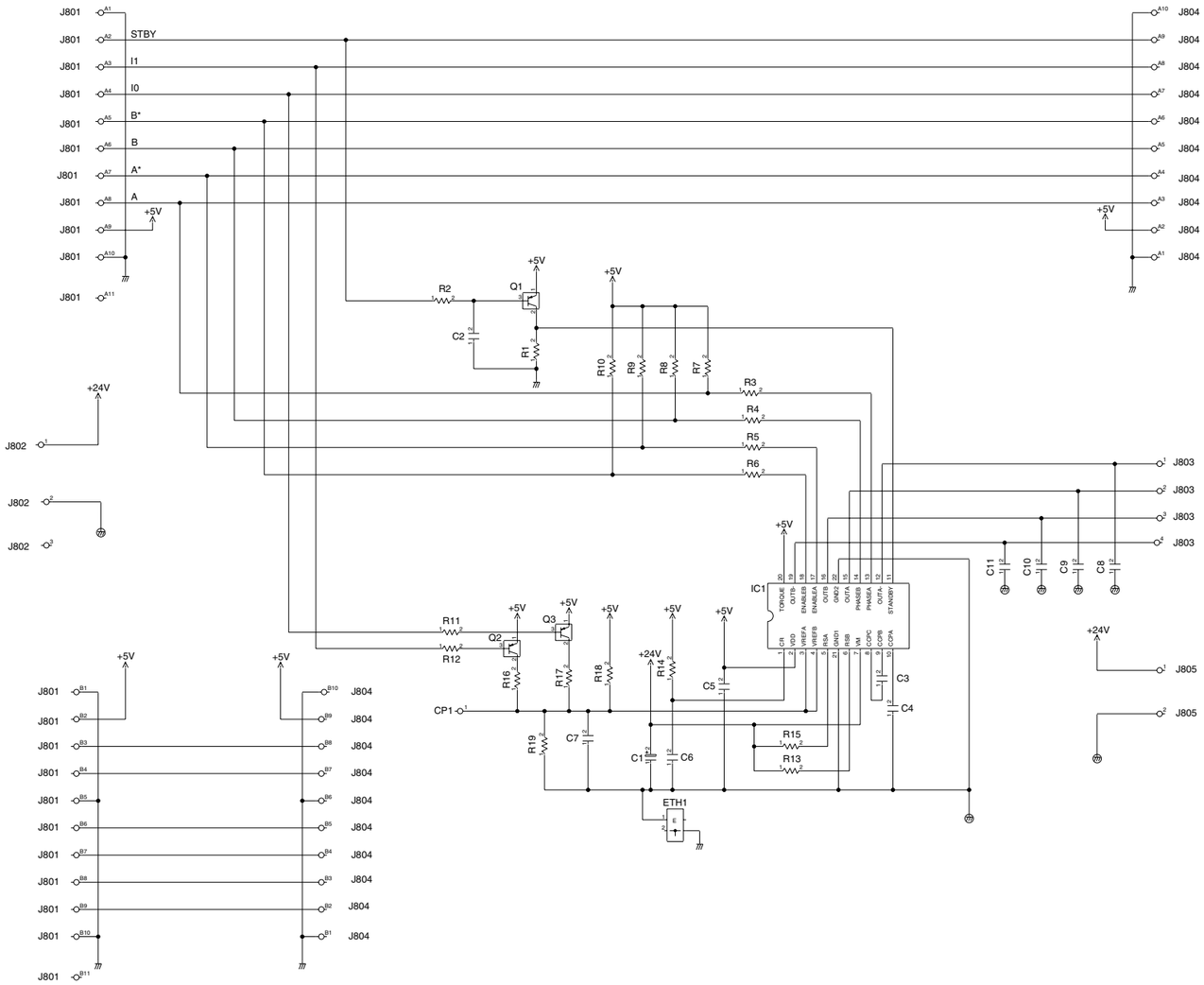

F-7-1

8 Paper Sensor PCB

Paper Sensor PCB

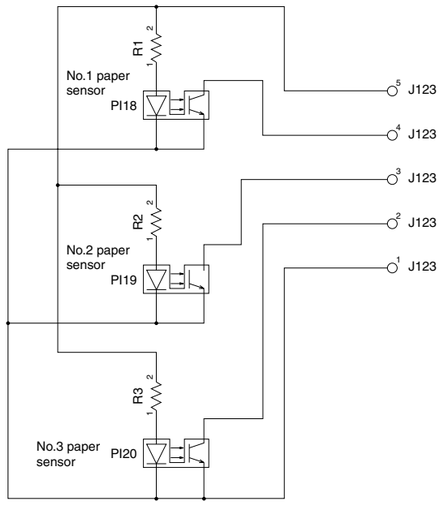

F-8-1

Nov 12 2003

Canon